Dynamic®

2022 PARTS CATALOG - US

INDIVIDUAL PART ORDER :

All orders must include the following criteria :
• model of machine • serial number
• description of the part • part number

NORTH AMERICAN DISTRIBUTION
Toll free phone : 1 (800) 267-7794
Email: info@dynamicmixers.com

CONDITIONS OF REPAIRS OR SERVICE (after sale service) :

Please return the machine to the following address :

USA : Dynamic USA
1320 route 9 # 1352, Champlain, NY, 12919
www.dynamicmixersusa.com

Or call us Toll Free 1-800-267-7794 for the nearest authorized service center.

For machines under warranty
Freight charges to the service centers remain the responsibility of the client. Return freight will be paid by Dynamic USA.

For machines not under warranty
(a) All freight charges remain the responsibility of the client.
(b) For all repairs not under warranty, an estimate will be completed and returned to the customer (via fax), for approval.
(c) Labor rate: A standard labor rate of 95,00 $ / hr will be applied to all repairs not under warranty.
(d) All service work completed by Dynamic USA will be warranted for a period of three (3) months after date of repair.
(e) A fee of 95,00 $ will be charged for all estimates performed, which have been declined by the client, and who request the machine to be returned to them assembled.

Returns
Returns are not accepted without prior written or verbal authorization from Dynamic USA. All returns are subject to a 25% restocking charge. Special order items are non-refundable.

Payment terms
All orders are subject to a net thirty (30).

TERMS & CONDITIONS :

This price list is effective for the year 2022, and supersedes all other price lists. Prices are subject to change without notice. Dynamic USA is not responsible for damage caused due to shipping. Should an item arrive damaged, please contact the factory immediately, so that a claim can be processed. Dynamic USA will utilize the courier company of its choice, unless otherwise specified by the customer, in which an account number must be provided.

HOW TO ORDER :

Toll free phone : 1 (800) 267-7794
Email: orders@dynamicmixers.com

MIXERS

	Page
MINIPRO	4
MD 95	8
JUNIOR STANDARD	9
JUNIOR PLUS	10
MMX 98	17
PMX 83	18
PMX 98	19
PMDH 250	20 & 21
MX 79	22
MX 85	23
MX 91	24
MX 2000	25
MDH 460	26
MDH 2000	27
MDH 3000	28
MX 2000 DSC 230 / 115 V - 50 / 60 Hz	29
SMX 450	42 & 43
SMX 500	44 & 45
SMX 502 - 600	46 & 47
SMX 600 E	48 & 49
SMX 650 ES	50 & 51
SMX 600 DSC 115 V	52 & 53
SMX 700 E	54 & 55
SMX 750 ES	56 & 57
SMX 800 E	58 & 59
SMX 800 DSC 115 V	60 & 61
SMX 850 ES	62 & 63

CORDLESS MIXER

MINIPRO CORDLESS	5
MXP 94 - Mini cordless	15

WHISKS

JUNIOR WHISK	13
FD 98	14
FT 97	30
FT 86	31
FT 79	32

CORDLESS WHISK

FTP 94 - Mini whisk cordless	16

MULTI-FUNCTION

JUNIOR COMBI	10 & 11
PMF 250	20 & 21
MF 90	33, 35 & 36
MF 2000	34, 35 & 36
MFAP 90	33, 35 & 36
MFAP 2000	34, 35 & 36

RICER

PP 84	38
PP 97	39
PP 97 +	40 & 41

ACCESSORIES

MINIPRO ACCESSORIES	6 & 7
JUNIOR ACCESSORIES	12
RICER TOOL AP 90 / FM Series	37
SMX BLENDER	64

CITRUS JUICER

PA 96	71

GIRAFFE

POWER PRO	66, 67, 68, 69 & 70

GIRAFFE MIXER

GM 93	72

SALAD SPINNERS

MANUAL SALAD SPINNER SD 99	73
MANUAL SALAD SPINNER SD 92	73
ELECTRIC SALAD SPINNER EM 98	74
ELECTRIC SALAD SPINNER EM98 WITH TIMER	75
MANUAL SALAD SPINNER SD 92 SC SEALED COVER	76 & 77

SUPPORTS

SM4, SM6, SM8, SM10, SM12	71

VEGETABLE CUTTERS

FOOD CUTTER CF 2000	72
DYNACOUPE	78
DYNACUBE	79

Parts list	Code	List $ Price
Regular blade	0551	**11.86**
Double lip waterproof seal	0632	**11.86**
Self-lubricating ring	0637	**2.65**
Pins 3 x 20	0744	**3.05**
Handle screws (2)	079958	**0.63**
Cover	2840	**21.03**
Hook	2841	**11.36**
Power cord 115V	2842.1	**29.37**
Right handle	2843	**37.63**
Shaft and sprocket	2844	**31.65**
Minipro foot assembly + bushing + seal	2845	**139.99**
Coupling	2846	**19.54**
Motor 230 V	2847	**139.25**
Motor 115 V	2847.1	**139.25**
Minipro label	2848.1	**18.14**
Left handle	2849	**37.63**
Screws + washers + handle nuts (2)	2850	**3.45**
Handle	2851	**35.97**
Circuit board	2852.1	**90.35**
ID label (230V)	2853	**7.78**
ID label (115V)	2853.1	**7.78**

Parts list	Code	List $ Price
Motor bracket	2854	**22.99**
Screws for motor bracket (2)	2855	**2.97**
Dynashake foot assembly + ring + seal	2856	**167.50**
Shaft and bearing (Dynashake)	2857	**45.41**
Variator knob	2858	**8.00**
Driving shaft joint	2859	**1.75**
Strain relief 115 V	2861.1	**3.76**
Fan	2865	**23.60**
Coupling hub	45123	**31.02**
Rubber button cap	45710	**4.26**

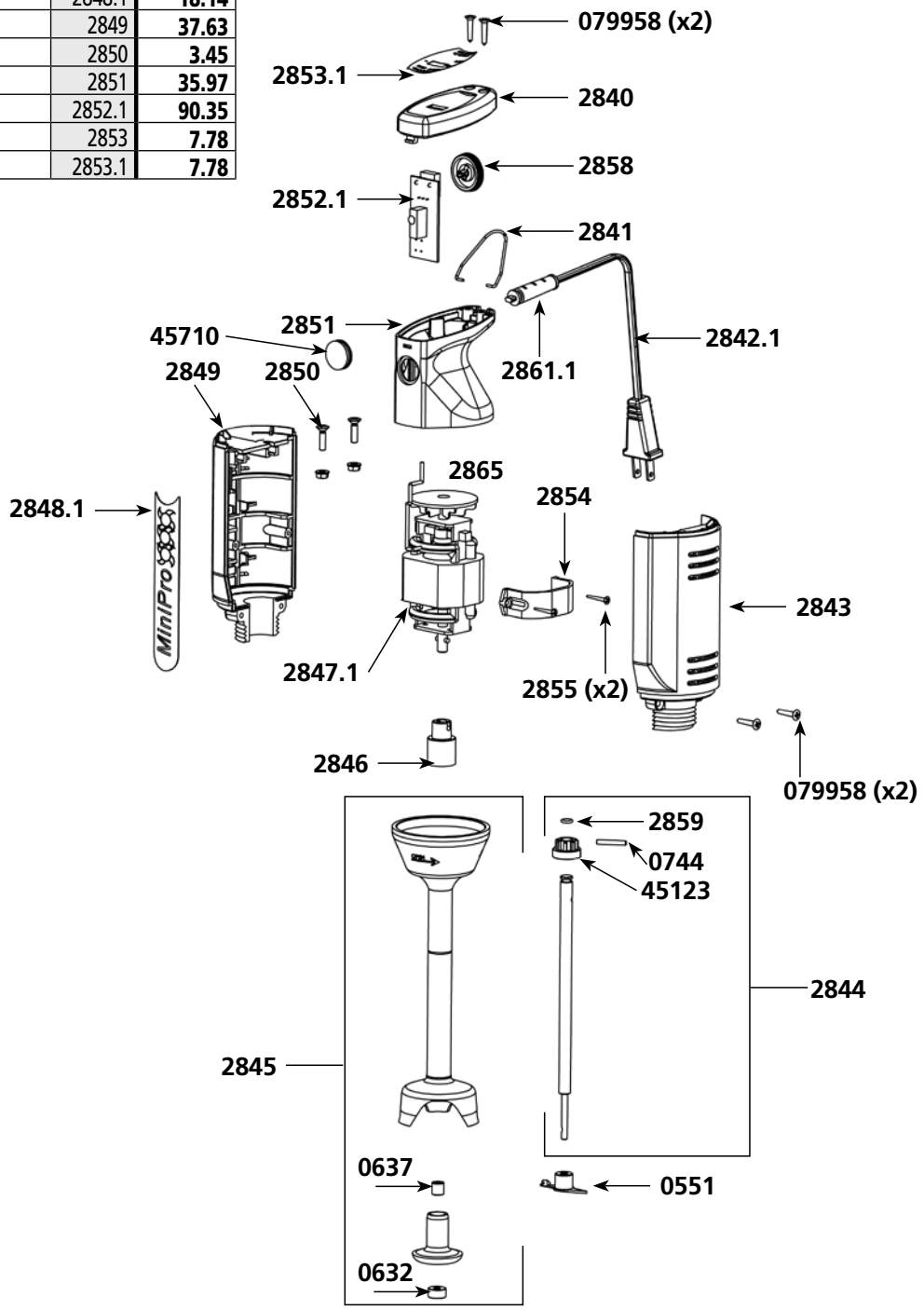

IMPORTANT : *Each spare part order must include the type and the number of the product which appears on the identification plate.*

Motor block MiniPro Cordless - Ref AC580

Parts list	Code	List $ Price
Right handle	2843	**37.63**
Left handle	2849	**37.63**
Screws + washer + handle nuts (2)	2850	**3.45**
Screws for motor belt (2)	2855	**2.97**
Battery housing	2900	**70.38**
Terminal support	2901	**31.74**
Motor support	2902	**23.09**
Motor belt	2903	**23.09**
Coupling	2904	**19.49**
Centraliser + screws	2905	**24.85**
Label	2906	**18.13**
Hood	2907	**63.18**
Circuit board	2908	**115.91**
ID label	2909	**7.79**
Screw	2910	**2.93**
12V DC Motor	9408	**134.43**
Handle cap protectors	45710	**4.26**
Handle screws (2)	079958	**0.63**
MiniPro Cordless battery (see machine catalog)	AC585	**-**
MiniPro Cordless battery charger 230 V (see machine catalog)	AC590	**-**
MiniPro Cordless battery charger 115 V (see machine catalog)	AC590.1	**-**

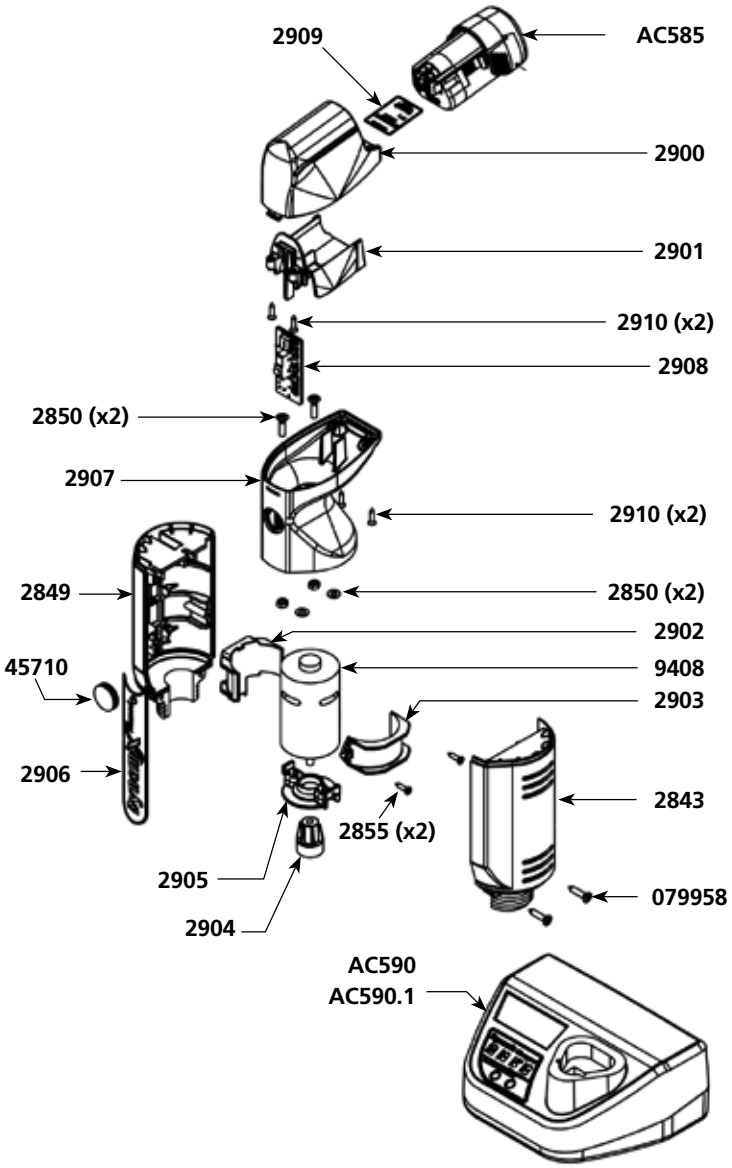

Tel. 1.800.267.7794
Fax : 1.877.668.6623
www.dynamicmixersusa.com
e-mail : info@dynamicmixers.com

Parts list	Code	List $ Price

Food Processor Bowl

Equipped cover	2880	**248.31**
Blade	2881	**82.78**
Bowl	2882	**58.44**
Base	1178	**23.13**

Equipped lid 2880

Equipped upper shaft	2885	**77.89**
Handle screws (4)	2886	**7.55**
Reduction plate + ring	2887	**29.70**
Lid + reduction gear	2888	**150.93**
O. ring (x4)	2871	**6.57**
O. ring	0658	**7.79**

Blade 2881

Equipped cone	2884	**31.16**
A blade	08999904	**26.80**
Blade holder	1176	**10.23**
B blade	08999905	**26.80**
Set of screws (x3)	9502	**0.84**

Blender AC560

Self-lubricating ring	0666D	**8.29**
Waterproof seal	0667D	**21.01**
Pin (3 x 20)	0744	**3.05**
Foot assembly	1421	**155.08**
Blender bell	1422	**80.43**
Blender blade	1423	**38.55**
Shaft	1424	**53.82**
Blender key	1425	**23.46**
Driving shaft joint	2859	**1.75**
Coupling hub	2860	**15.95**

Blade

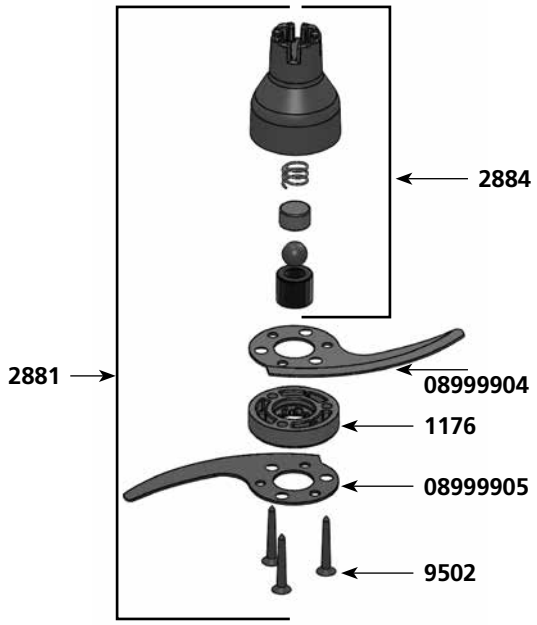

Equipped lid

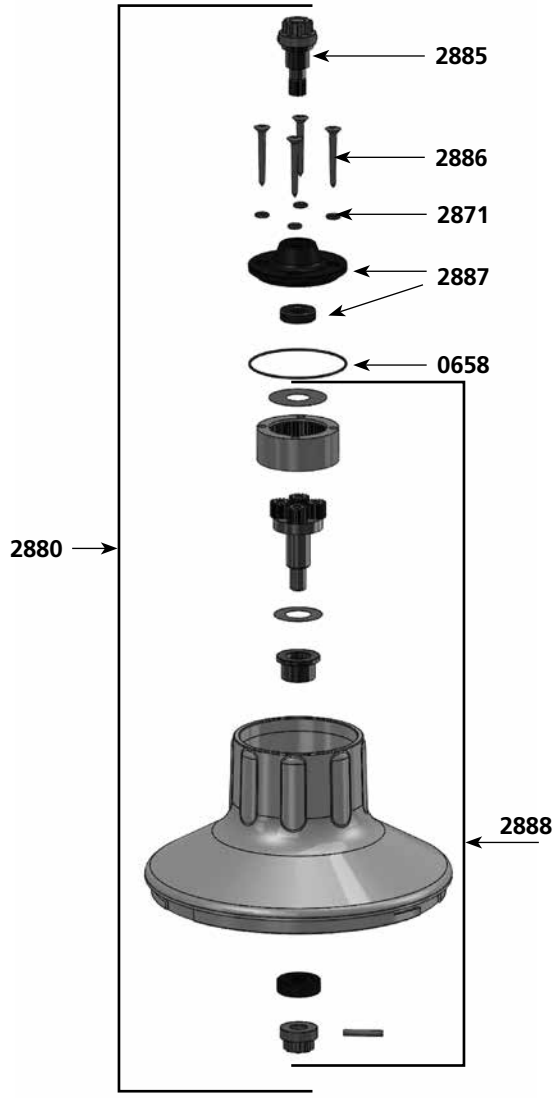

Food Processor Bowl

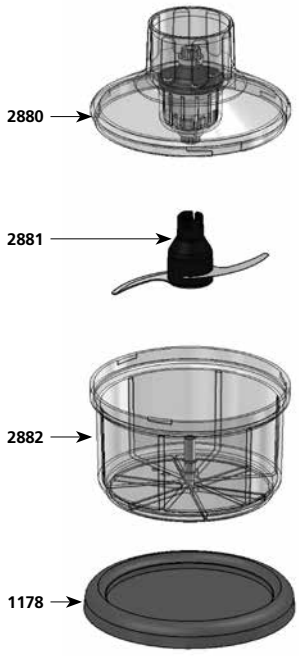

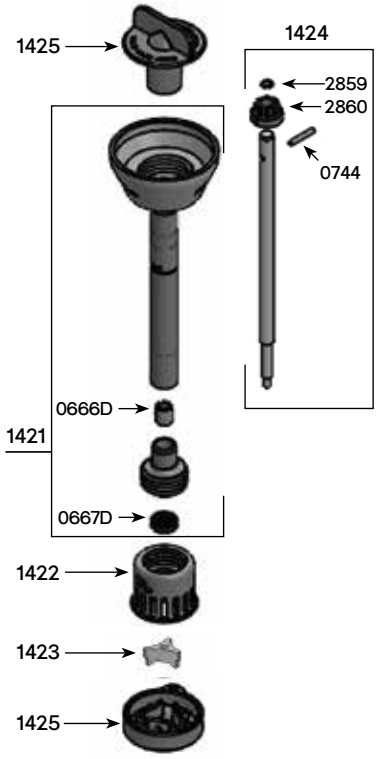

IMPORTANT : *Each spare part order must include the type and the number of the product which appears on the identification plate.*

Potato Ricer assembly

Parts list	Code	List $ Price
Handle screws (4)	2870	**8.03**
O. ring (x4)	2871	**6.57**
Ricer inferior carter	1179	**41.87**
Equipped upper shaft	2872	**90.08**
Secured washer	1181	**9.24**
Interior geared crown	2873	**99.83**
Equipped output shaft	2874	**175.27**
Equipped spacer for potato ricer	2875	**53.55**
Nut holder + nut	2876	**17.27**
Potato grid	089940	**75.46**
Grid holder	1195	**5.37**
Potato blade	08995	**45.02**
Compression washer	1196	**4.39**
O. ring	0650	**7.55**

Whisk assembly

Parts list	Code	List $ Price
Lower motor whisk housing	2890	**132.68**
Equipped output axle w/ 2 gears+pins	2891	**88.86**
Holder assembly w/ 3 self-lubricating rings	2892	**50.14**
Whisk tool (2)	2893	**92.51**
Reduction gear assembly (without whisk)	2894	**199.61**
Equipped upper shaft	4020	**90.44**
Equipped plate with rings	4021	**53.63**
Holder assembly screws	4022	**5.80**
Middle gear & axle	9420	**118.21**

Potato Ricer assembly

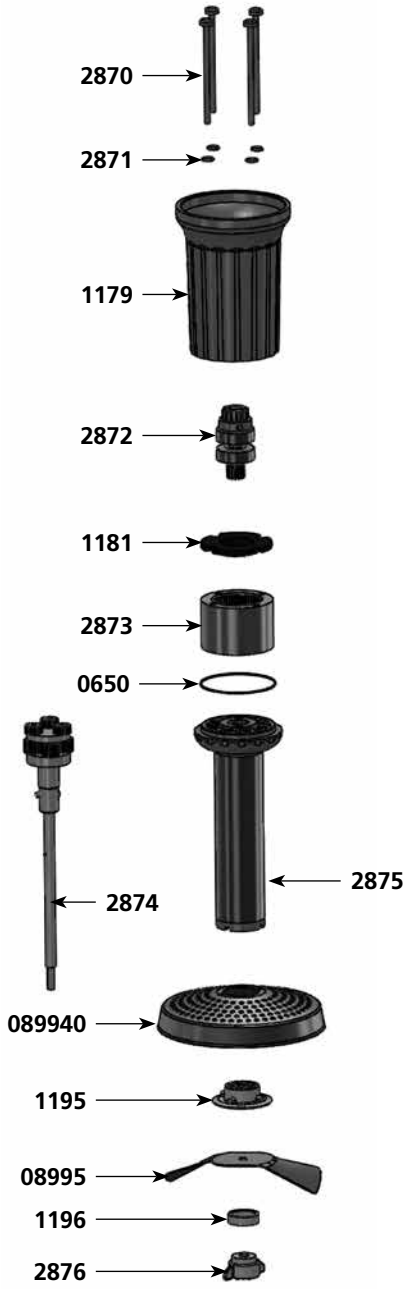

Ricer grid assembly

Whisk tool dismantling

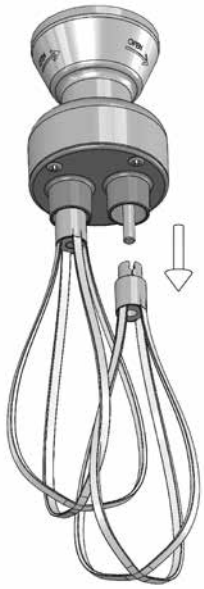

Whisk assembly

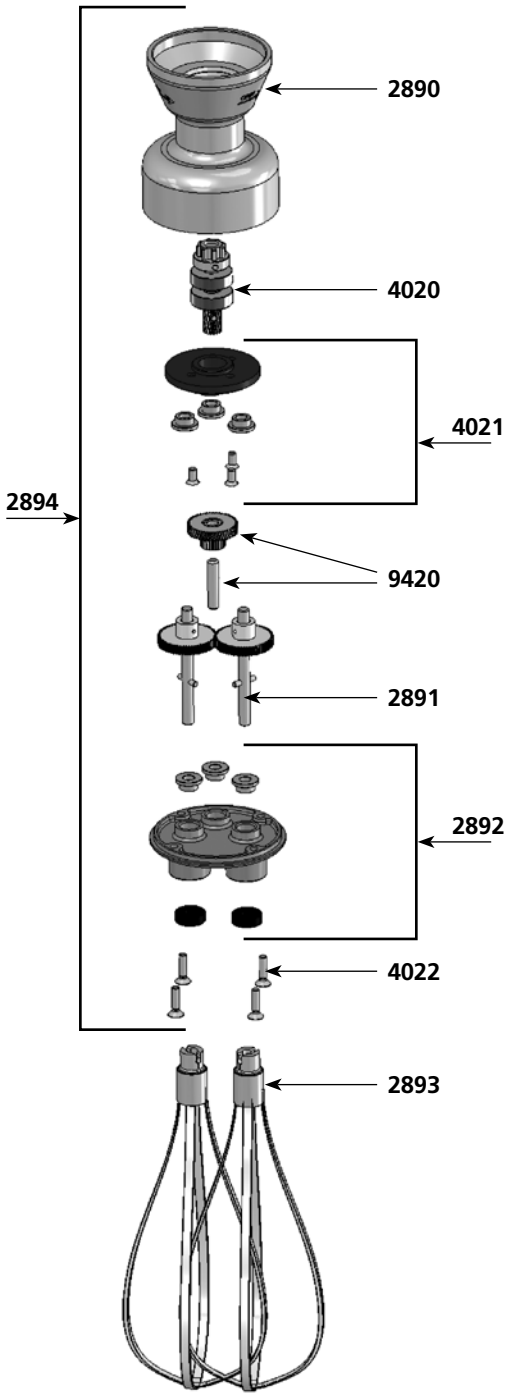

Tel. 1.800.267.7794
Fax : 1.877.668.6623

www.dynamicmixersusa.com
e-mail : info@dynamicmixers.com

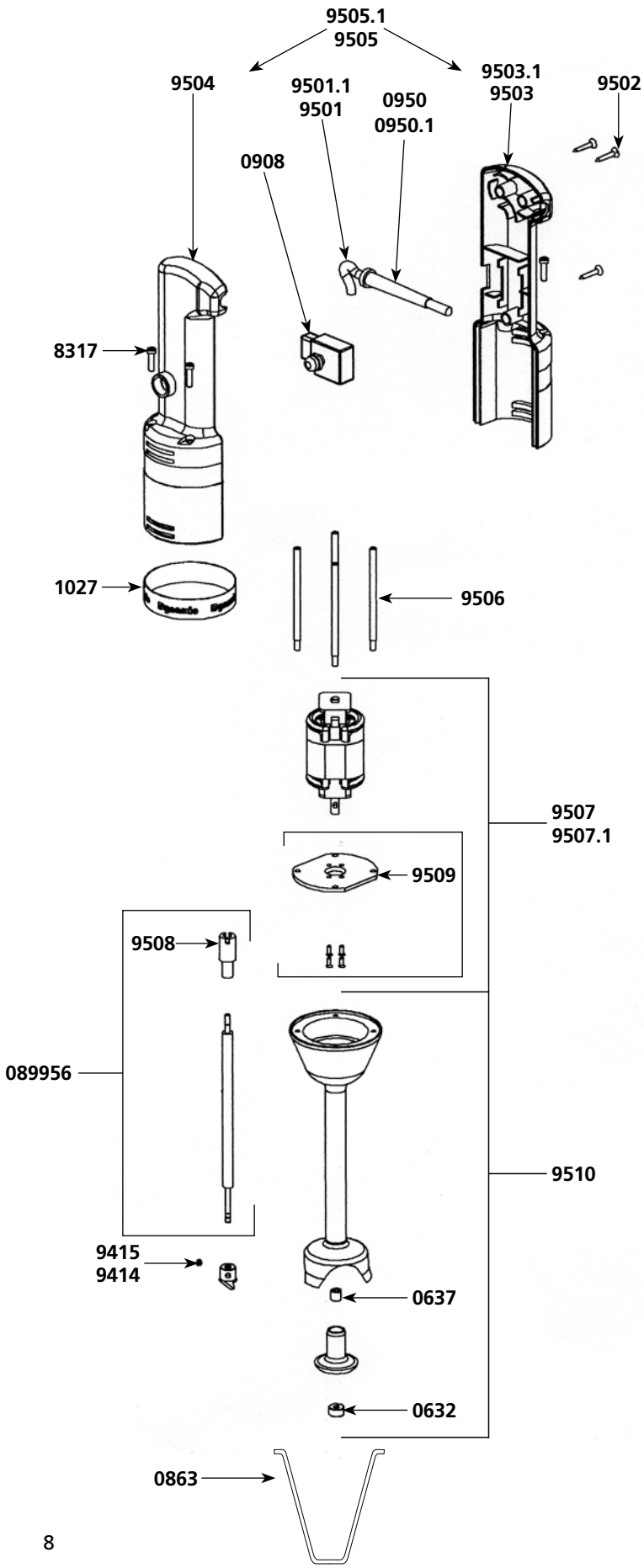

Parts list	Code	List $ Price
Waterproof seal	0632	**11.86**
Bushing	0637	**2.65**
Hook	0863	**10.74**
Complete stainless steel shaft + coupling	089956	**29.83**
Non-locking switch	0908	**41.06**
Filtering Capacitor	0909	**17.39**
Strain relief 230V	0950	**3.44**
Strain relief 115V	0950.1	**3.44**
Dynamic label	1027	**17.11**
Spacer screws (4)	8317	**6.37**
Emulsifying blade	9414	**11.86**
Cutter blade w/screw	9415	**11.86**
Power cord 230 V	9501	**27.72**
Power cord 115 V	9501.1	**27.72**
Handle screws (3)	9502	**0.84**
Lower handle w/ label 230 V	9503	**64.58**
Lower handle w/ label 115 V	9503.1	**64.58**
Upper half handle	9504	**63.92**
Complete handle 230 V (w/sticker. screws. logo. switch. strain relief. power cord	9505	**144.52**
Complete handle 115 V (w/sticker. screws. logo. switch. strain relief. power cord	9505.1	**144.52**
Spacer rods (4)	9506	**18.16**
Motor & screw & capacitor 230 V	9507	**131.26**
Motor & screw & capacitor 115 V	9507.1	**131.26**
Coupling sleeve	9508	**12.77**
Motor holder w/4 screws	9509	**16.31**
Foot assembly w/ bearing (exc. shaft + blade)	9510	**131.99**
Motor brushes (2) 230 V	9512	**18.41**
Motor brushes (2) 115 V	9512.1	**18.41**

IMPORTANT : *Each spare part order must include the type and the number of the product which appears on the identification plate.*

Parts list	Code	List $ Price
Motor 230 V	0535	**233.16**
Motor 115 V	0535.1	**233.16**
Waterproof seal	0632	**11.86**
Bushing	0642	**2.65**
Stainless steel shaft + coupling	0870	**50.73**
Wall bracket	089959	**28.79**
Non-locking switch	0908	**41.06**
Strain relief 230 V	0950	**3.44**
Strain relief 115 V	0950.1	**3.44**
Dynamic label	1027	**17.11**
Label w/ serial number 230 V	1081	**7.17**
Label w/ serial number 115 V	1082	**7.17**
Complete handle 230 V	4000	**91.78**
Lower half handle w/ label 230 V	4001	**39.97**
Lower half handle w/ label 115 V	4001.1	**39.97**
Upper motor housing	4002	**33.56**
Foot assembly w/ bearing (exc. Shaft + blade)	4003	**176.36**
Cutter blade	4004	**40.29**
Spacer rods (4)	4005	**21.68**
Ball bearing sleeve	4006	**6.16**
Coupling sleeve	4007	**16.73**
Filtering capacitor	4008	**22.10**
Emulsifying blade	4009	**56.27**
Carbon brushes (2) 230 V	4050	**17.18**
Carbon brushes (2) 115 V	4050.1	**17.18**
Spacer screws (4)	7903	**6.37**
Power cord 230 V	9011	**30.44**
Power cord 115 V	9040	**38.09**
Handle screws (3)	9502	**0.84**
Upper half handle	9812	**35.89**
Switch protector	9813	**11.87**

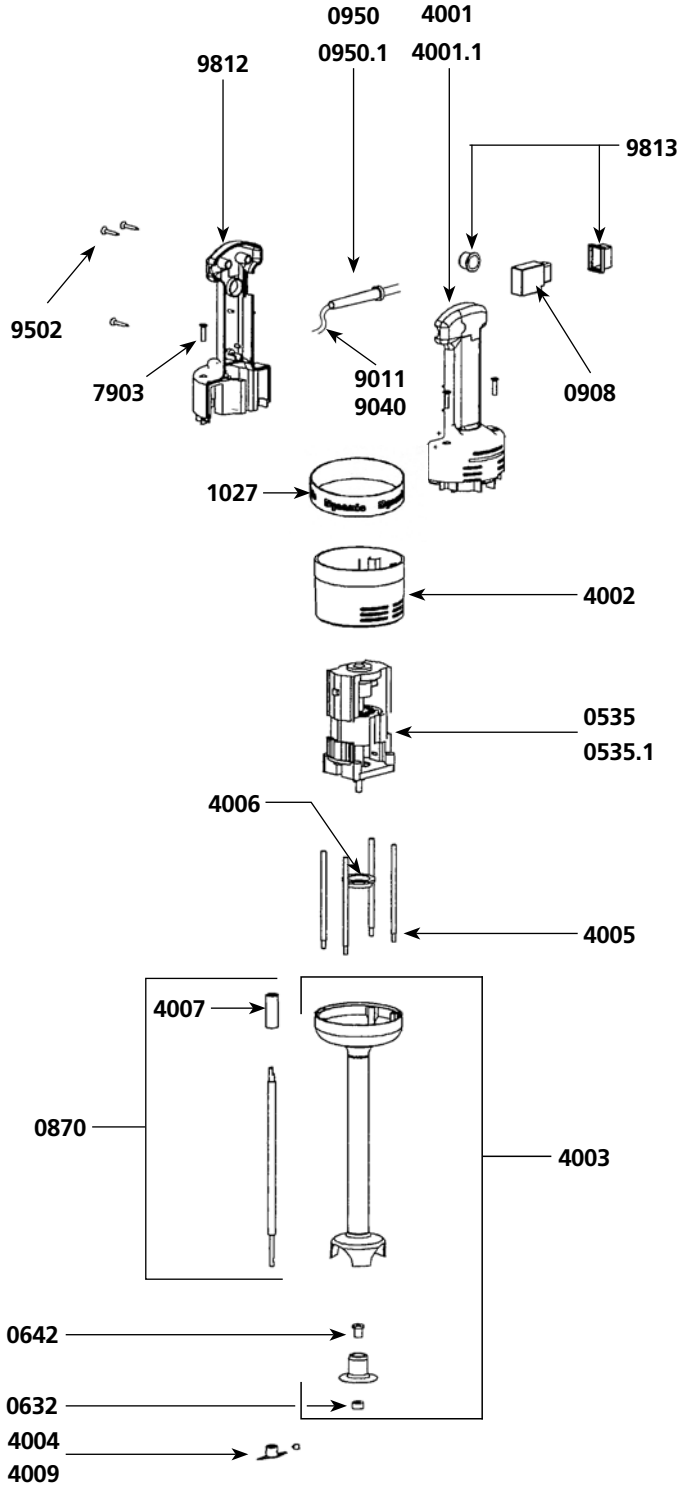

Tel. 1.800.267.7794
Fax : 1.877.668.6623
www.dynamicmixersusa.com
e-mail : info@dynamicmixers.com

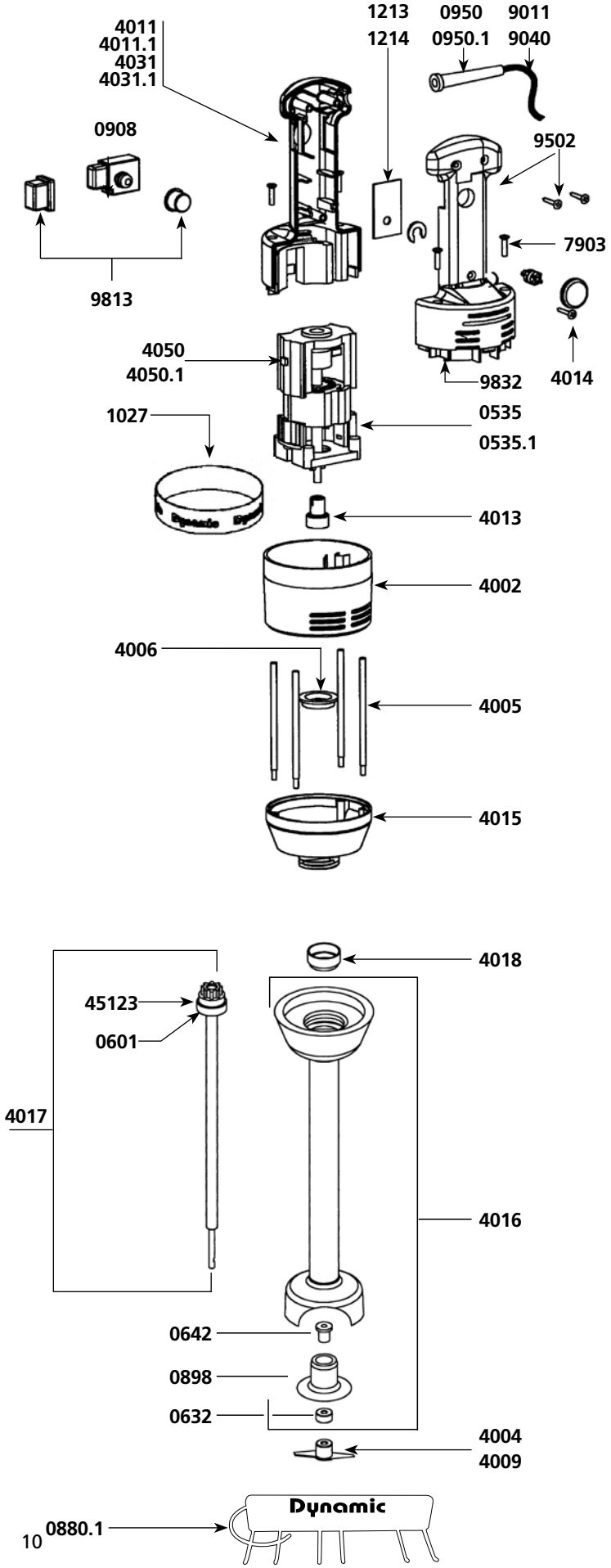

Power unit

Parts list	Code	List $ Price
Motor 230 V	0535	**233.16**
Motor 115 V	0535.1	**233.16**
Wall bracket	0880.1	**110.91**
Non-locking switch	0908	**41.06**
Strain relief 230V	0950	**3.44**
Strain relief 115V	0950.1	**3.44**
Dynamic label	1027	**17.11**
Id label (Junior Plus) 230V	1084	**7.38**
Id label (Junior Plus) 115V	1085	**7.38**
Id label (Junior Combi) 230V	1086	**7.38**
Id label (Junior Combi) 115V	1087	**7.38**
Speed variator 230V	1213	**135.95**
Speed variator 115V	1214	**118.15**
Upper motor housing	4002	**33.56**
Spacer rods (4)	4005	**21.68**
Ball bearing sleeve	4006	**6.16**
Complete handle w/ power cord 230V	4010	**148.61**
Complete handle w/ power cord 115V	4010.1	**148.61**
Lower half handle w/ Junior Plus label 230V	4011	**39.97**
Lower half handle w/ Junior Plus label 115V	4011.1	**39.97**
Filtering capacitor	4012	**23.93**
Coupling	4013	**18.41**
Speed variator knob	4014	**18.41**
Lower aluminium motor housing	4015	**159.53**
Complete handle w/ power cord 230V	4030	**148.61**
Complete handle w/ power cord 115V	4030.1	**148.61**
Lower half handle w/ Junior Combi label 230V	4031	**39.97**
Lower half handle w/ Junior Combi label 115V	4031.1	**39.97**
Motor brushes (2) 230 V	4050	**17.18**
Motor brushes (2) 115 V	4050.1	**17.18**
Spacer screws (4)	7903	**6.37**
Power cord 230 V	9011	**30.44**
Power cord 115 V	9040	**38.09**
Handle screws (3)	9502	**0.84**
Switch protector	9813	**11.87**
Upper half handle Junior Plus & Junior Combi	9832	**35.89**

Complete foot assembly

Parts list	Code	List $ Price
Ball bearing	0601	**19.61**
Waterproof seal	0632	**11.86**
Bushing	0642	**2.65**
Bearing only	0898	**22.67**
Cutter blade	4004	**40.29**
Emulsifying blade	4009	**56.27**
Foot assembly	4016	**255.73**
Kit w/shaft and coupling hub	4017	**110.48**
Ball bearing sleeve	4018	**5.54**
Coupling hub	45123	**31.02**

IMPORTANT : *Each spare part order must include the type and the number of the product which appears on the identification plate.*

Whisk tool

Parts list	Code	List $ Price
Ball bearing	0601	**19.61**
Pins 3 x 10	0638	**2.75**
Pins 3 x 20	0744	**3.05**
Open head locking washer (unit)	0766	**1.91**
Entry gear	0837A	**40.93**
Lower motor whisk housing	4019	**166.61**
Equipped upper shaft (complete)	4020	**90.44**
Plate w/ seals and screws	4021	**53.63**
Holder assembly screws (4)	4022	**5.80**
Reduction gear assembly	4025	**366.37**
Middle gear & shaft	9420	**118.21**
Equipped output axle w/ 2 gears+pins	9421	**112.44**
Holder assembly w/ 3 self lubricating rings	9422	**59.72**
Whisk tool (2)	9424	**107.67**
Coupling hub	45123	**31.02**
Upper driving shaft	089947	**42.99**

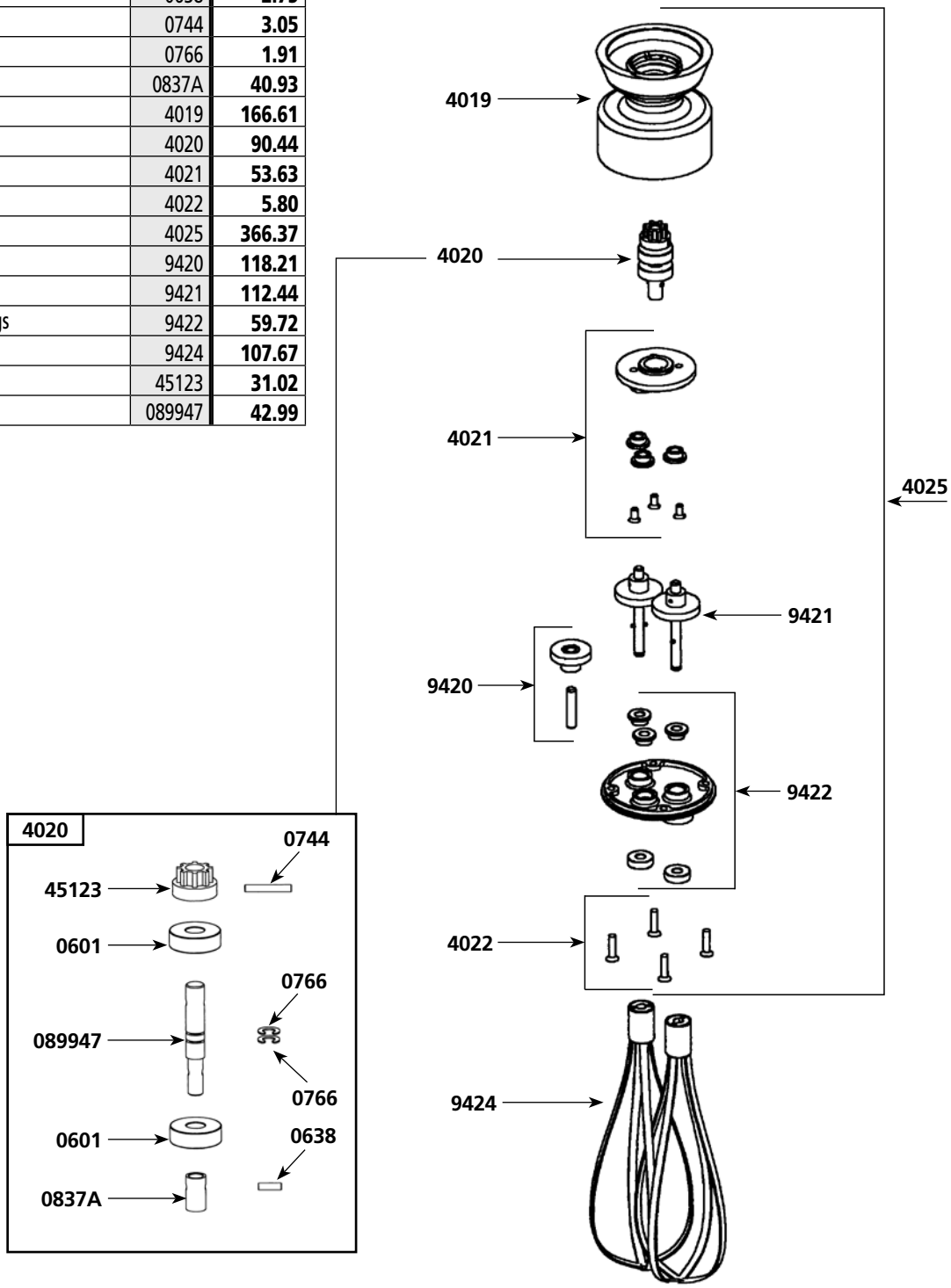

Tel. 1.800.267.7794
Fax : 1.877.668.6623
www.dynamicmixersusa.com
e-mail : info@dynamicmixers.com

Junior cutter

Parts list	Code	List $ Price
Base	1178	**24.53**
Equipped cover	2880.J	**293.19**
Blade	2881.J	**90.38**
Bowl	2882	**61.94**

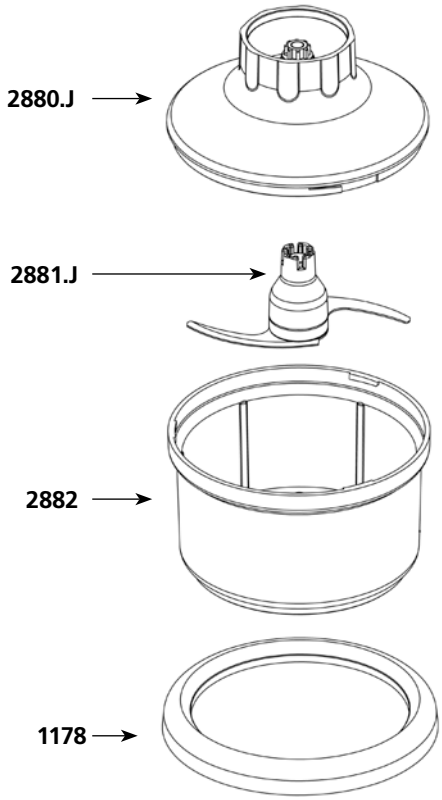

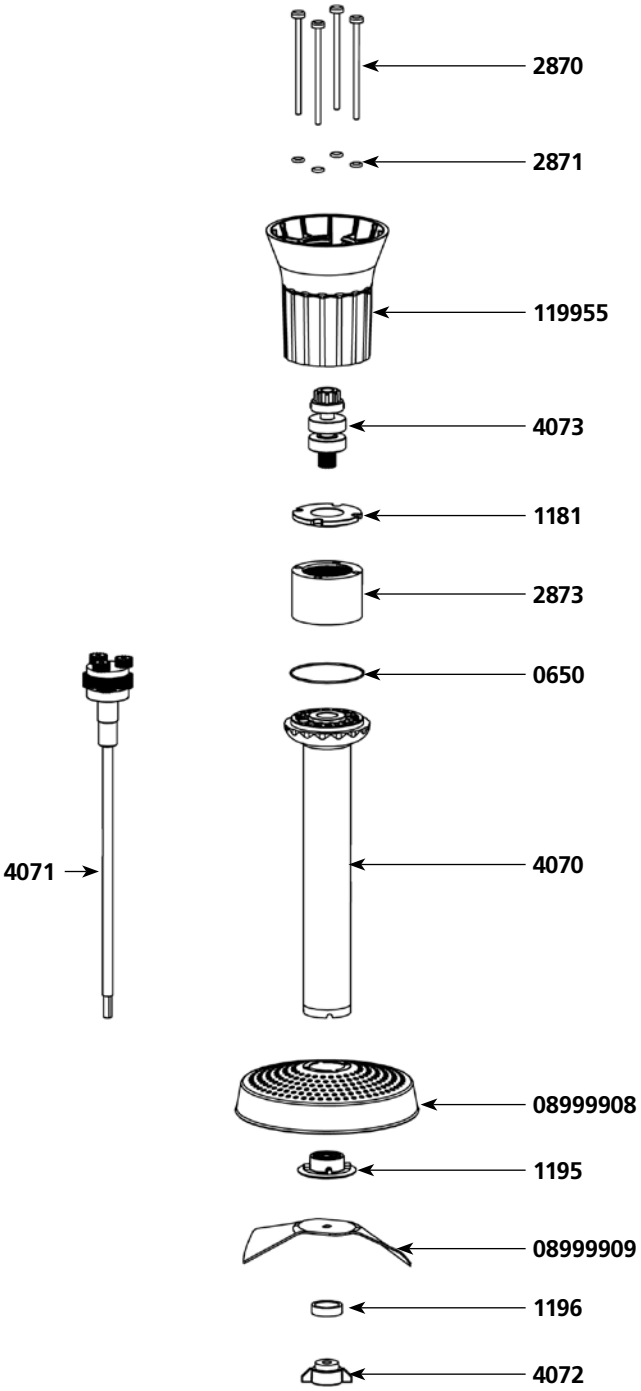

Junior Potato Ricer

Parts list	Code	List $ Price
Potato grid Junior	08999908	**90.48**
Potato blade Junior	08999909	**53.59**
O. ring	0650	**8.00**
Secured washer	1181	**9.79**
Grid holder	1195	**5.69**
Compression washer	1196	**4.63**
Ricer inferior carter Junior	119955	**47.20**
Handle screws (x 4)	2870	**8.79**
O. ring (x 4)	2871	**7.16**
Interior geared crown	2873	**105.78**
Equipped spacer for potato ricer Junior	4070	**63.12**
Equipped output shaft Junior	4071	**197.82**
Nut holder + nut Junior	4072	**18.89**
Equipped upper shaft Junior	4073	**98.30**

IMPORTANT : *Each spare part order must include the type and the number of the product which appears on the identification plate.*

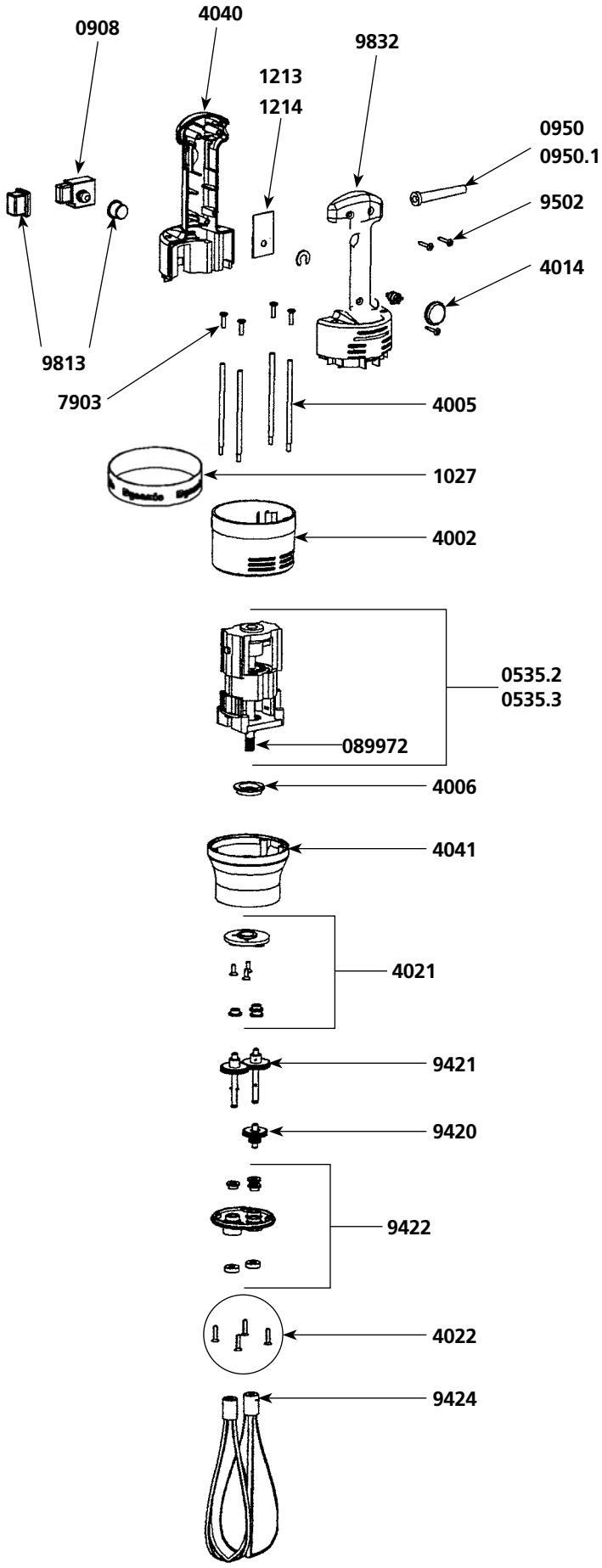

Parts list	Code	List $ Price
Motor 230 V + Gear	0535.2	**281.66**
Motor 115 V + Gear	0535.3	**285.76**
Pin 3x14	0745	**2.75**
Non-locking switch	0908	**41.06**
Strain relief 230 V	0950	**3.44**
Strain relief 115 V	0950.1	**3.44**
Dynamic label	1027	**17.11**
Speed variator 230 V	1213	**135.95**
Speed variator 115 V	1214	**118.15**
Upper motor housing	4002	**33.56**
Spacer rods (4)	4005	**21.68**
Ball bearing sleeve	4006	**6.16**
Filtering capacitor	4012	**23.93**
Speed variator knob	4014	**18.41**
Plate w/ seals and screws	4021	**53.63**
Holder assembly screws (4)	4022	**5.80**
Lower half handle w/ Junior Whisk label 230 V	4040	**39.97**
Lower half handle w/ Junior Whisk label 115 V	4040.1	**39.97**
Lower aluminium motor housing	4041	**166.61**
Complete handle Junior Whisk 230 V	4042	**173.64**
Complete handle Junior Whisk 115 V	4042.1	**173.64**
Motor brushes (2) 230 V	4050	**17.18**
Motor brushes (2) 115 V	4050.1	**17.18**
Spacer screws (4)	7903	**6.37**
Power cord 230 V	9011	**30.44**
Power cord 115 V	9040	**38.09**
Middle gear & axle	9420	**118.21**
Equipped output axle w/ 2 gears+pins	9421	**112.44**
Holder assembly w/ seals & washer	9422	**59.72**
Whisk tool (2)	9424	**107.67**
Handle screws (3)	9502	**0.84**
Switch protector	9813	**11.87**
Upper half handle	9832	**35.89**
Label w/ serial number 230 V	1099.10	**7.38**
Label w/ serial number 115 V	1099.11	**7.38**
Wall bracket	089959	**28.79**
Gear + Pin	089972	**54.25**

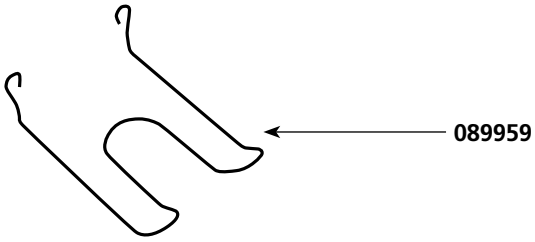

Tel. 1.800.267.7794
Fax : 1.877.668.6623

www.dynamicmixersusa.com
e-mail : info@dynamicmixers.com

Parts list	Code	List $ Price
Pin for gear	0638	**2.75**
Enter gear w/ pin	0837	**57.05**
Non-locking switch	0908	**41.06**
Capacitor	0909	**17.39**
Strain relief 230 V	0950	**3.44**
Strain relief 115 V	0950.1	**3.44**
Dynamic label	1027	**17.11**
ID label 230 V	1059	**15.05**
ID label 115 V	1060	**15.05**
Speed variator 230 V	1213	**135.95**
Speed variator 115 V	1214	**118.15**
Spacer screws (4)	8317	**6.37**
Whisk connection box w/3 rings	9418	**98.09**
Middle gear & axle	9420	**118.21**
Output axle	9421	**112.44**
Holder assembly w/ 3 self lubricating rings	9422	**59.72**
Whisk tools (2)	9424	**107.67**
Power cord 230 V	9501	**27.72**
Power cord 115 V	9501.1	**27.72**
Handle screws (3)	9502	**0.84**
Upper half handle	9504	**63.92**
Spacer rods	9506	**18.16**
Half handle label side 230 V	9801	**64.58**
Half handle label side 115 V	9801.1	**64.58**
Complete handle 230 V (w/variator. power cord. switch and strain relief)	9802	**229.34**
Complete handle 115 V (w/variator. power cord. switch and strain relief)	9802.1	**229.34**
Motor holder	9803	**15.87**
Motor support w/4 screws 230 V	9804	**140.94**
Motor support w/4 screws 115 V	9804.1	**140.94**
Variator knob	9806	**5.28**

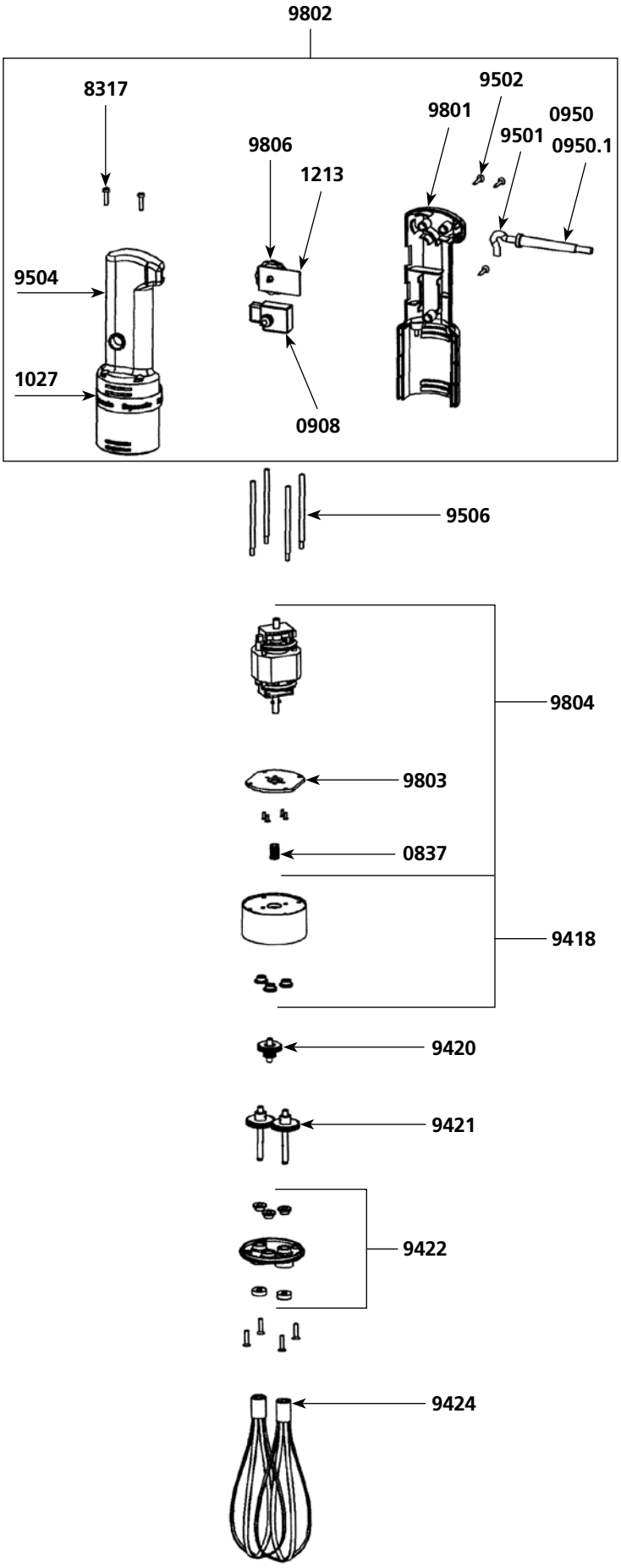

IMPORTANT : *Each spare part order must include the type and the number of the product which appears on the identification plate.*

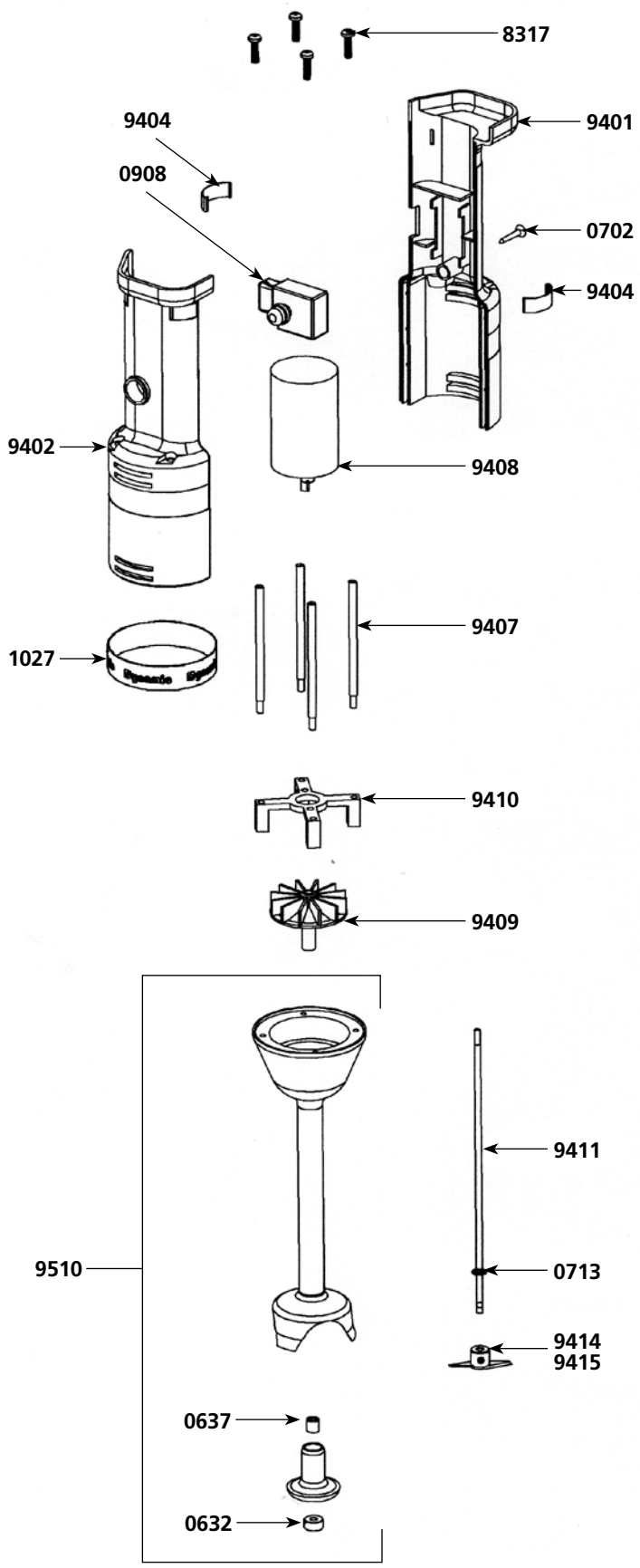

Parts list	Code	List $ Price
Waterproof seal	0632	**11.86**
Self-lubricating ring	0637	**2.65**
Handle screw (1)	0702	**1.02**
Locking washer	0713	**2.38**
Non-locking switch	0908	**41.06**
Dynamic label	1027	**17.11**
Spacer screws (4)	8317	**6.37**
Half handle (label side)	9401	**59.03**
Upper half handle	9402	**59.03**
Clips (2)	9404	**8.06**
Spacer rods (4)	9407	**18.16**
Motor	9408	**134.43**
Fan (coupling)	9409	**9.19**
Motor holder + screws	9410	**8.04**
Main shaft + locking washer	9411	**17.00**
Emulsifying blade	9414	**11.86**
Cutter blade w/screw	9415	**11.86**
Complete handle	9430	**118.17**
Foot assembly w/ bearing (exc. shaft + blade)	9510	**131.99**

Charger and battery
See machine catalog

Tel. 1.800.267.7794
Fax : 1.877.668.6623
www.dynamicmixersusa.com
e-mail : info@dynamicmixers.com

FTP 94 MINI CORDLESS WHISK

Parts list	Code	List $ Price
Handle screw (1)	0702	**1.02**
Non-locking switch	0908	**41.06**
Dynamic label	1027	**17.11**
Holder assembly screws	4022	**5.80**
Spacer screws (4)	8317	**6.37**
Lower half handle (label side)	9401.1	**59.03**
Upper half handle	9402	**59.03**
Clips (2)	9404	**8.06**
Spacer rods (4)	9416	**18.16**
Motor & gear	9417	**166.17**
Whisk connection box w/3 rings	9418	**98.09**
Middle gear & axle	9420	**118.21**
Equipped output shaft w/2 gears + 2 pins	9421	**112.44**
Holder assembly w/ seals & washer+D331	9422	**59.72**
Whisks (2)	9424	**107.67**
Complete handle	9431	**118.17**

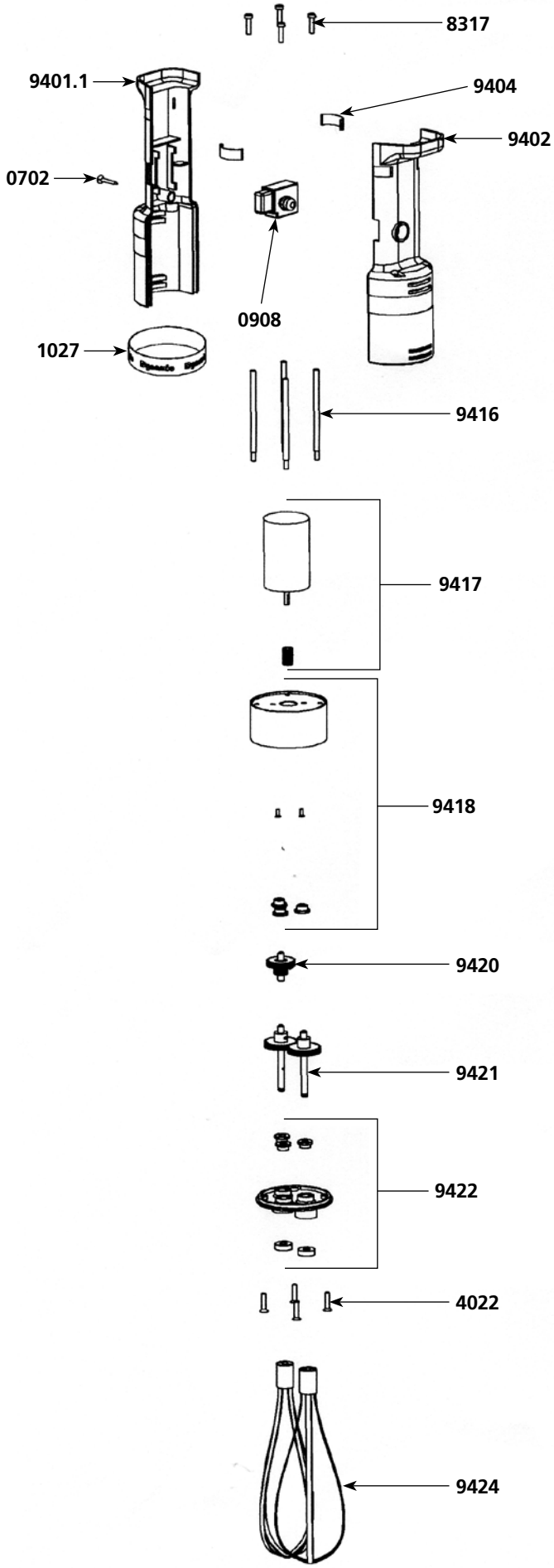

IMPORTANT : *Each spare part order must include the type and the number of the product which appears on the identification plate.*

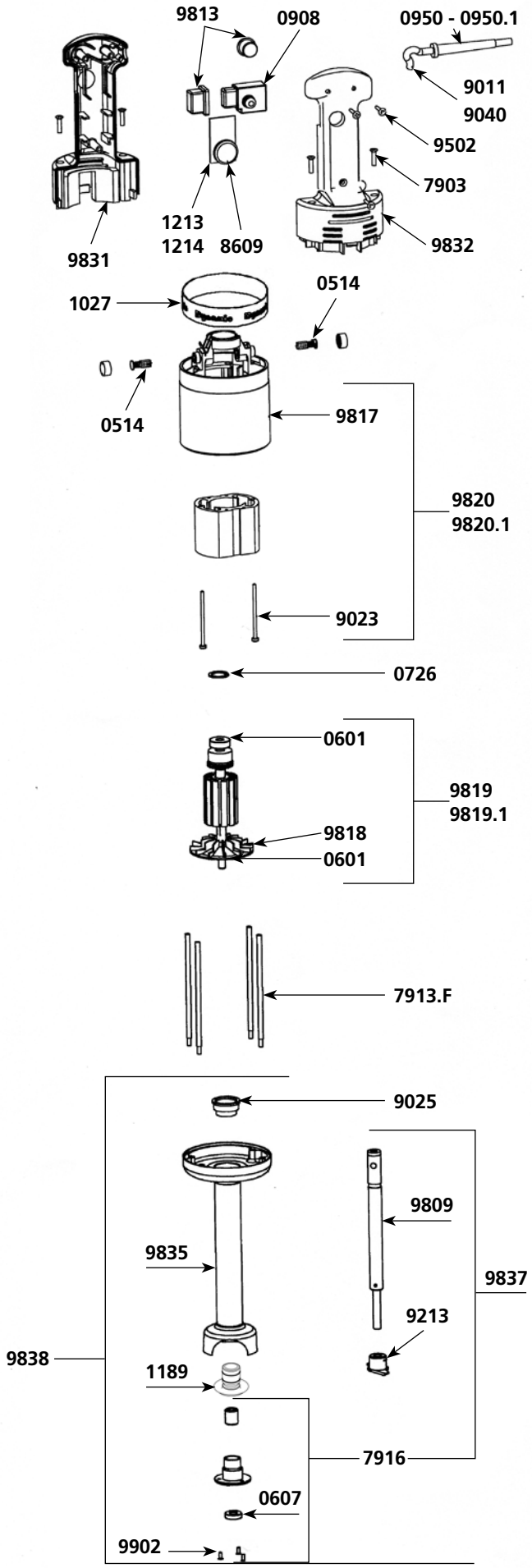

Parts list	Code	List $ Price
Motor brushes (2)	0514	**19.61**
Ball bearing	0601	**19.61**
Waterproof seal	0607	**25.60**
Squeezing washer	0726	**2.75**
Non-locking switch	0908	**41.06**
Capacitor	0909	**17.39**
Strain relief 230 V	0950	**3.44**
Strain relief 115V	0950.1	**3.44**
Warning label	1017	**6.90**
Dynamic label	1027	**17.11**
Label w/ serial number 230 V	1065	**6.56**
Label w/ serial number 115 V	1066	**6.56**
Bearing holder + ring	1189	**29.33**
Variable speed control board 230 V	1213	**135.95**
Variable speed control board 115 V	1214	**118.15**
Spacer screws (4)	7903	**6.37**
Spacer rods (4)	7913.F	**22.12**
Lower bearing assembly	7916	**47.53**
Variable speed control button	8609	**19.12**
Power cord (2 cords) 230 V	9011	**30.44**
Stator screws (2)	9023	**5.18**
Self-lubricating ring	9025	**5.98**
Power cord 115 V	9040	**38.09**
Cutter blade w/screws	9213	**51.95**
Handle screws (3)	9502	**0.84**
Shaft	9809	**100.74**
Switch protector	9813	**11.87**
Upper motor casing (w/carbon brushes holder)	9817	**61.17**
Fan	9818	**14.12**
Rotor 230 V	9819	**331.07**
Rotor 115 V	9819.1	**331.07**
Stator 230 V (w/carter. carbon brushes holder)	9820	**331.07**
Stator 115 V (w/carter. carbon brushes holder)	9820.1	**331.07**
Complete handle w/ slot for speed control knob 230 V	9830	**173.64**
Complete handle w/ slot for speed control knob 115 V	9830.1	**173.64**
Lower half handle (label side) 230V	9831	**39.97**
Upper half handle (label side) 115V	9831.1	**39.97**
Upper half handle	9832	**35.89**
Foot assembly (tube + housing + bell + bearing)	9835	**209.58**
Motor & shaft housing	9837	**173.64**
Complete foot assembly	9838	**368.19**
Lower bearing screws (3)	9902	**1.72**

Tel. 1.800.267.7794
Fax : 1.877.668.6623

www.dynamicmixersusa.com
e-mail : info@dynamicmixers.com

Parts list	Code	List $ Price
Motor brushes (2)	0514	**19.61**
Ball bearing	0601	**19.61**
Self-lubricating ring	0604	**2.78**
Waterproof seal	0607	**25.60**
O. ring	0611	**2.75**
Motor self-lubricating ring	0829	**29.74**
Hook	0860	**10.74**
Stainless steel bell	0833	**122.46**
Non-locking switch	0908	**41.06**
Capacitor	0909	**17.39**
Strain relief 230 V	0950	**3.44**
Strain relief 115 V	0950.1	**3.44**
Spacer rods (4)	7913M	**22.12**
Complete handle 230 V	8301	**104.21**
Complete handle 115 V	8301.1	**104.21**
Handle only w/screws	8302	**56.99**
Power cord 230 V	8303	**40.93**
Power cord 115 V	8303.2	**48.69**

Parts list	Code	List $ Price
Complete Motor 230 V	8304	**573.17**
Complete Motor 115 V	8304.1	**573.17**
Rotor 230 V	8304.12	**331.07**
Rotor 115 V	8304.13	**331.07**
Stator 230 V	8304.22	**331.07**
Stator 115 V	8304.23	**331.07**
Shaft	8309	**102.82**
S.S. lower ball bearing assembly	8310	**171.18**
Motor & shaft housing	8311	**279.71**
Cutter blade w/screw	8313	**51.95**
Upper motor casing (w/carbon brushes holder)	8315	**70.36**
Spacer screws	8317	**6.37**
Lower motor casing	8318	**18.08**
Handle cover + screws	8319	**13.54**
Deflector	8320	**12.49**
Ground wire	8321	**7.59**
Screws w/ ground washer (2)	8322	**1.19**
Fan	8323	**12.49**

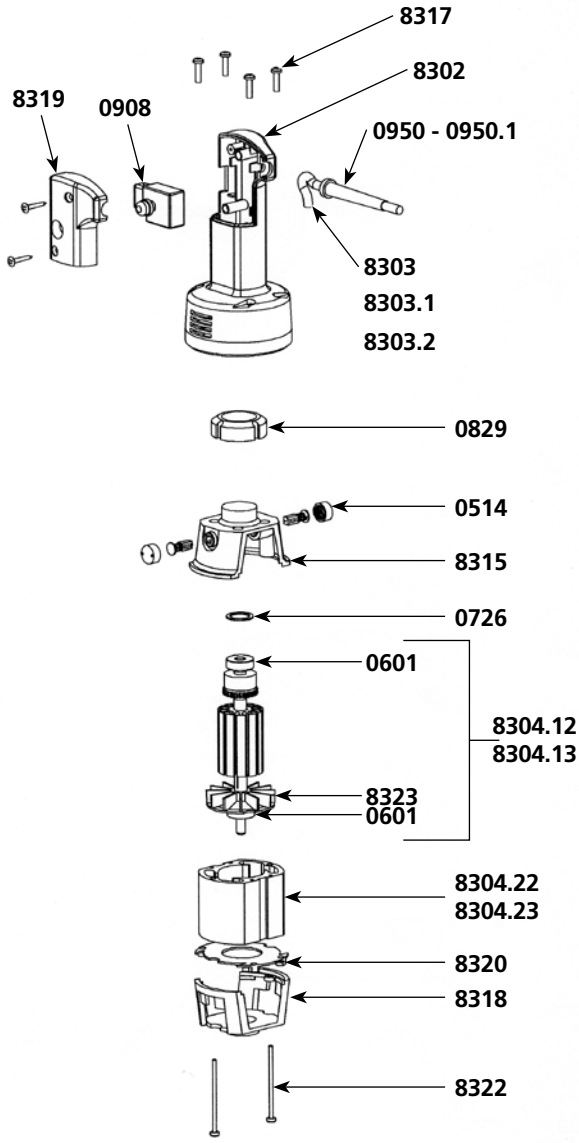

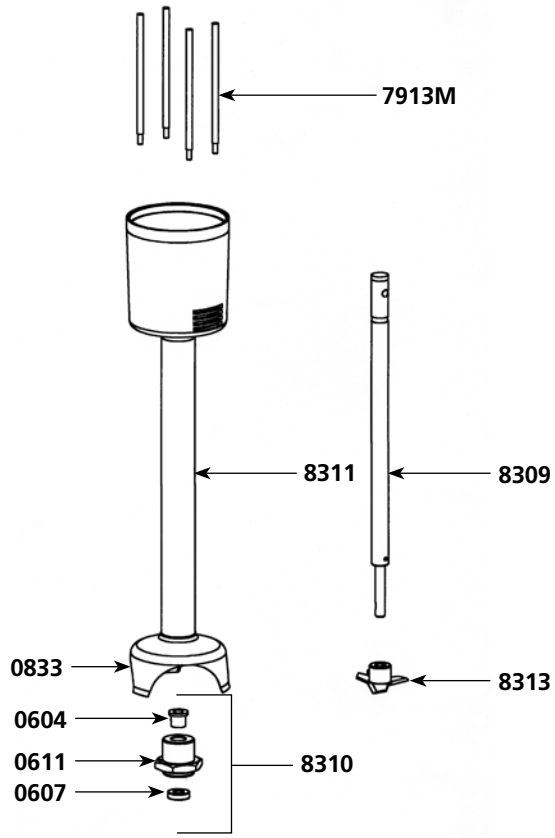

IMPORTANT : *Each spare part order must include the type and the number of the product which appears on the identification plate.*

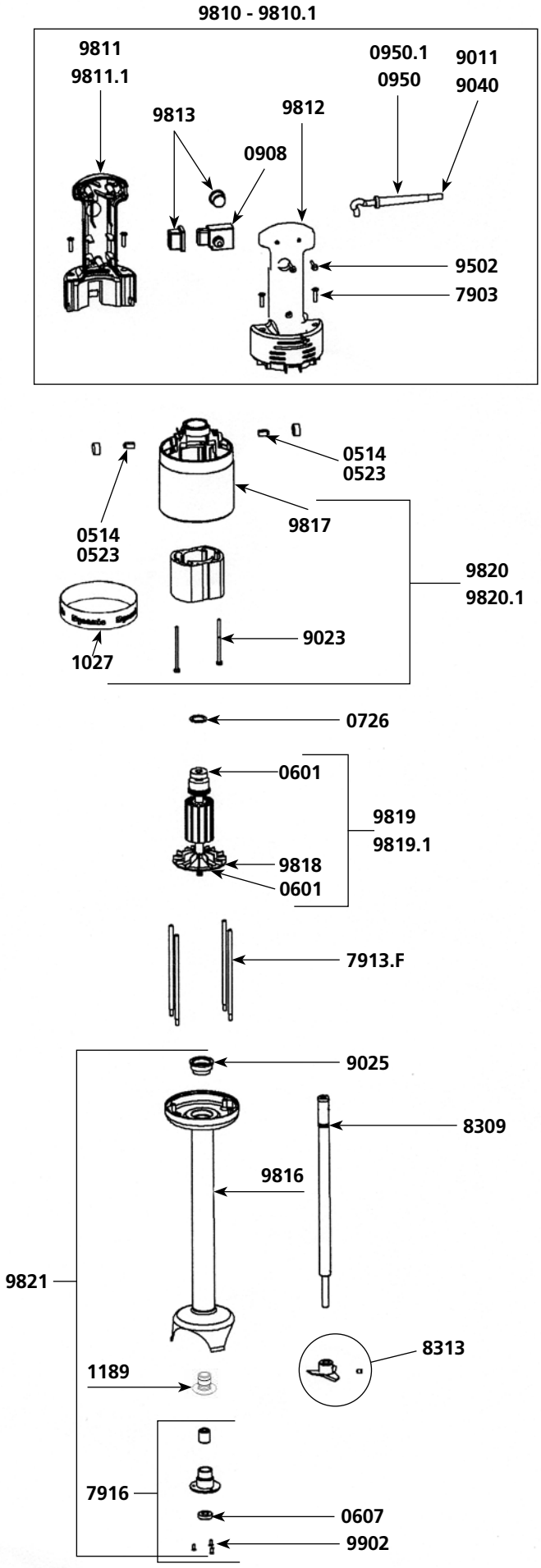

Parts list	Code	List $ Price
Motor brushes (2)	0514	**19.61**
Motor Brushes (2) after serial # 130803	0523	**19.61**
Ball bearing	0601	**19.61**
Waterproof seal	0607	**25.60**
Squeezing washer	0726	**2.75**
Wall bracket	089959	**28.79**
Non-locking switch	0908	**41.06**
Strain relief 230 V	0950	**3.44**
Strain relief 115V	0950.1	**3.44**
Capacitor	0972.1	**22.58**
Warning label	1017	**6.90**
Dynamic label	1027	**17.11**
Label w/ serial number 230 V	1063	**7.17**
Label w/ serial number 115 V	1064	**7.17**
Lower bearing assembly support	1189	**29.33**
Speed variator (option) (230V)	1213	**135.95**
Speed variator (option) (115V)	1214	**118.15**
Spacer screws (4)	7903	**6.37**
Spacer rods (4)	7913.F	**22.12**
Lower ball bearing assembly	7916	**47.53**
Shaft	8309	**102.82**
Cutter blade w/screw	8313	**51.95**
Power cord 230 V	9011	**30.44**
Stator screws (2)	9023	**5.18**
Ball bearing sleeve	9025	**5.98**
Power cord 115 V	9040	**38.09**
Handle screws (3)	9502	**0.84**
Complete handle 230 V	9810	**91.78**
Complete handle 115 V	9810.1	**91.78**
Lower half handle w/ label 230 V	9811	**39.97**
Lower half handle w/ label 115 V	9811.1	**39.97**
Upper half handle	9812	**35.89**
Switch protector (2)	9813	**11.87**
Motor & shaft housing + palier + bearing	9816	**209.58**
Upper motor casing (w/carbon brushes holders)	9817	**61.17**
Fan	9818	**14.12**
Rotor 230 V	9819	**331.07**
Rotor 115 V	9819.1	**331.07**
Stator 230 V (w/carter. carbon brushes holders)	9820	**331.07**
Stator 115 V (w/carter. carbon brushes holders)	9820.1	**331.07**
Complete foot assembly	9821	**402.96**
Shaft. lower ball bearing & cutter assembly	9836	**173.64**
Lower bearing screws (3)	9902	**1.72**

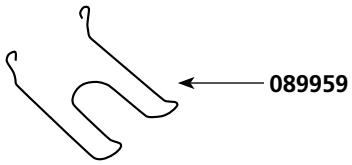

Tel. 1.800.267.7794
Fax : 1.877.668.6623

www.dynamicmixersusa.com
e-mail : info@dynamicmixers.com

MOTOR BLOCK PMDH / PMF 250

Parts list	Code	List $ Price
Motor brushes (2)	0514	**19.61**
Ball bearing	0601	**19.61**
Squeezing washer	0726	**2.75**
Wall bracket	0880	**99.52**
Non-locking switch	0908	**41.06**
Capacitor	0909	**17.39**
Strain relief 230 V	0950	**3.44**
Strain relief 115V	0950.1	**3.44**
Warning label	1017	**6.90**
Dynamic label	1027	**17.11**
Label w/ serial number 230 V	1071	**7.17**
Label w/ serial number 115 V	1072	**7.17**
Variable speed control board 230 V	1213	**135.95**
Variable speed control board 115 V	1214	**118.15**
Spacer screws (4)	7903	**6.37**
Spacer rods (4)	7913.F	**22.12**
Variable speed control knob	8609	**19.12**
Power cord 230 V	9011	**30.44**
Stator screws (2)	9023	**5.18**
Self-lubricating ring	9025	**5.98**
Coupler for armature	9028	**13.08**
Power cord 115 V	9040	**38.09**
Handle screws (3)	9502	**0.84**
Switch protector	9813	**11.87**
Upper motor casing	9817	**61.17**
Fan	9818	**14.12**
Rotor w/o coupling 230 V	9819	**331.07**
Rotor w/o coupling 115 V	9819.1	**331.07**
Stator 230 V w/carter. carbon brushes holders	9820	**331.07**
Stator 115 V w/carter. carbon brushes holders	9820.1	**331.07**
Upper half handle	9832	**35.89**
Complete handle 230 V	9840	**173.64**
Complete handle 115 V	9840.1	**173.64**
Lower half handle w/ label 230 V	9841	**39.97**
Lower half handle w/ label 115 V	9841.1	**39.97**
Aluminium carter	9842	**184.07**
BM 250 Motor block (see machine catalog)	AC005	**-**

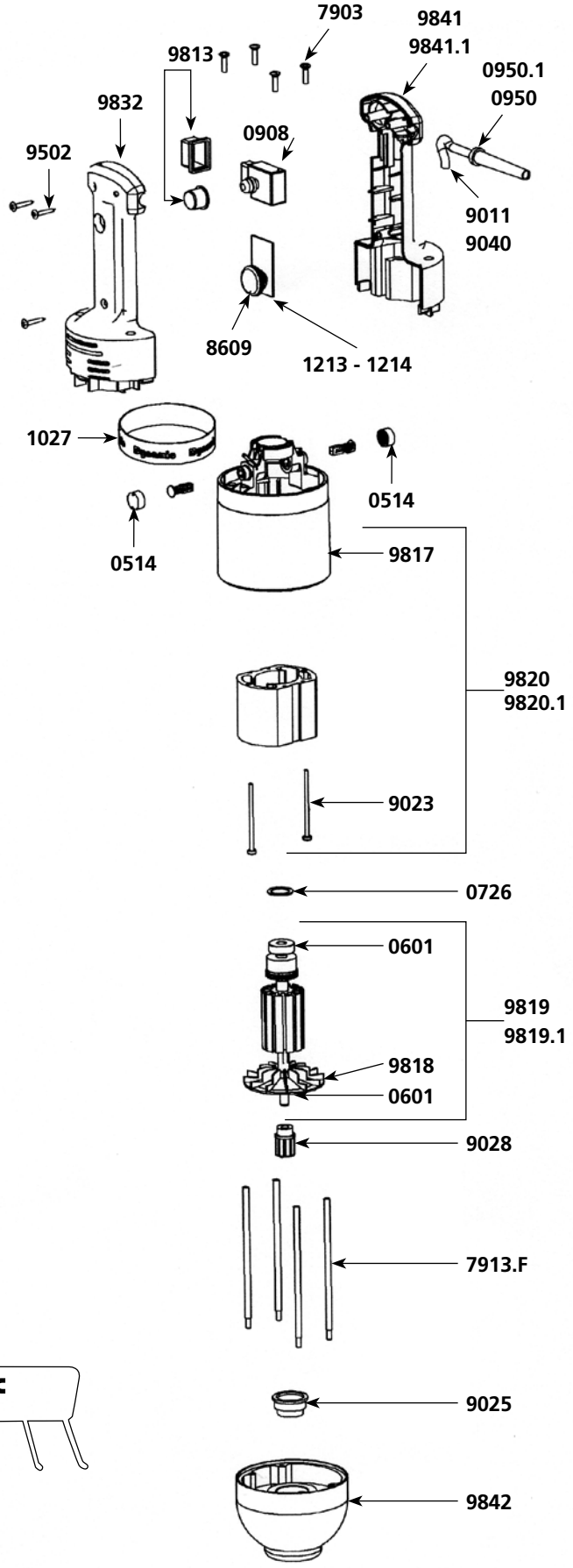

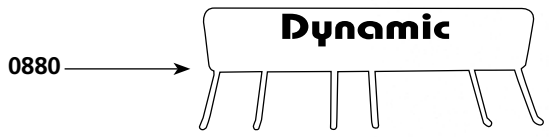

IMPORTANT : *Each spare part order must include the type and the number of the product which appears on the identification plate.*

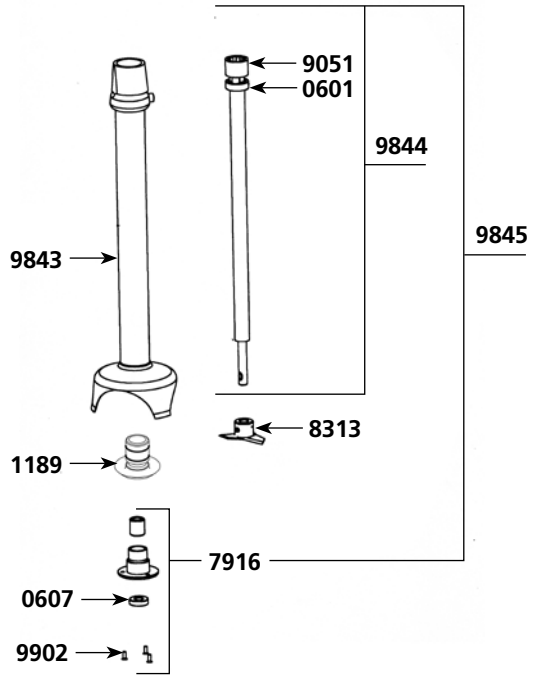

PMF - PMDH 250 foot

Parts list	Code	List $ Price
Ball bearing	0601	**19.61**
Waterproof seal	0607	**25.60**
Lower bearing assembly support	1189	**29.33**
Lower ball bearing assembly	7916	**47.53**
Cutter blade (w/screw)	8313	**51.95**
Coupling casing + pins	9051	**20.74**
Tube assembly + palier + bearing	9843	**173.64**
Shaft & coupling sleeve	9844	**222.33**
Shaft. lower bearing & cutter assembly	9845	**200.17**
Lower bearing screws (3)	9902	**1.72**
M 250 Complete Mixer tool (see machine catalog)	AC006	**-**

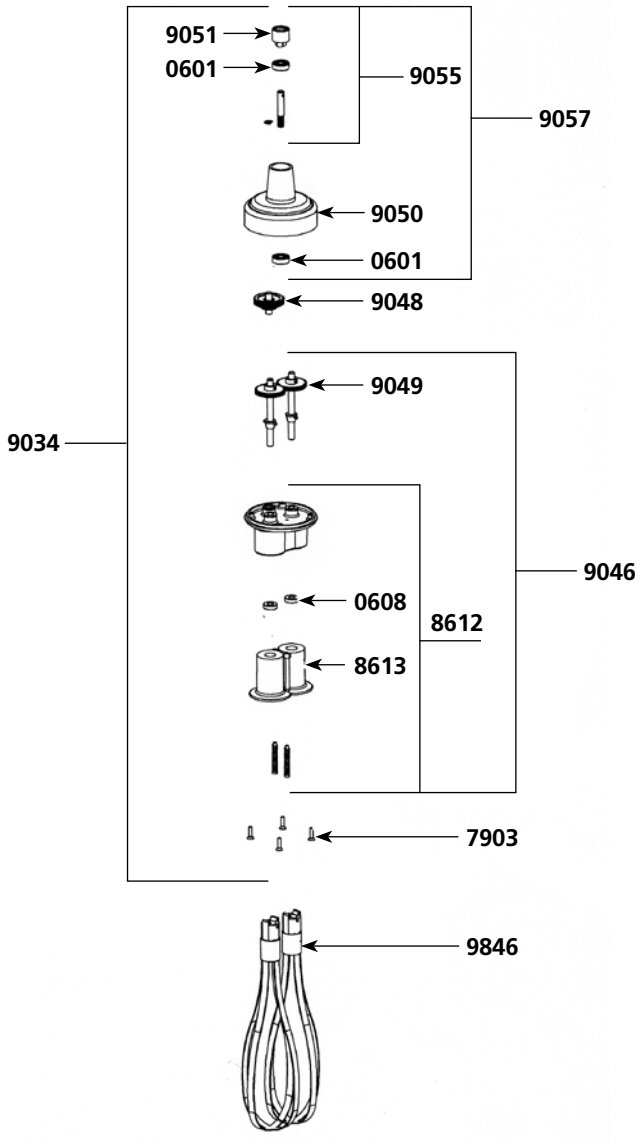

PMF 250 whisk tools

Parts list	Code	List $ Price
Ball bearing	0601	**19.61**
Waterproof seal for whisk	0608	**26.32**
Pin 3 X 20	0744	**3.05**
Pin 3 X 14	0745	**2.75**
Spacer screws (4)	7903	**6.37**
Holder + plastic ejector + seal	8612	**89.41**
Plastic ejectors (pair)	8613	**38.17**
Reduction gear assembly	9034	**404.84**
Lower casing w/o middle gear	9046	**335.68**
Central double gear & shaft	9048	**142.45**
Single gear (2) + pin	9049	**115.79**
Upper plastic casing	9050	**118.15**
Coupling casing + pin	9051	**20.74**
Equipped upper shaft	9055	**98.40**
Complete upper casing	9057	**153.52**
Whisks (2)	9846	**194.59**
F 250 Complete Whisk tool (see machine catalog)	AC007	**-**

Tel. 1.800.267.7794
Fax : 1.877.668.6623

www.dynamicmixersusa.com
e-mail : info@dynamicmixers.com

Parts list	Code	List $ Price
Sleeve	0415	**46.44**
Motor brushes (2)	0504	**19.61**
Ball bearing	0601	**19.61**
Waterproof seal	0607	**25.60**
O. ring	0610	**2.75**
Squeezing washer	0726	**2.75**
Rocking switch	0903	**24.08**
Strain relief 230 V	0950	**3.44**
Strain relief 115 V	0950.1	**3.44**
Complete handle	7901	**62.51**
Spacer screws (4)	7903	**6.37**
ID plate 230 V	7904M	**67.41**
ID plate 115 V	7904M.1	**67.41**
Motor housing w/carbon brush holder	7905	**58.56**
Motor 230 V	7908	**522.96**
Motor 115 V	7908.1	**522.96**
Rotor with fan 115 V	7908.11	**320.66**
Rotor with fan 230 V	7908.12	**312.65**
Stator 115 V	7908.21	**329.51**
Stator 230 V	7908.22	**329.51**
Power cord 230 V	7911M	**40.93**
Power cord 115 V	7911M.1	**40.93**
Ball bearing sleeve	7912	**5.18**
Brace (4)	7913M	**22.12**
Foot assembly w/ lower bearing assembly	7914	**427.93**
Shaft & coupling sleeve	7915	**102.82**
Lower bearing assembly	7916	**47.53**
Cutter blade w/screw	7917	**51.95**
Capacitor	7931	**17.39**
Fan	7933	**12.50**
Shaft. lower bearing & cutter assembly	7934	**177.13**
Handle top w/screw	7938	**25.45**
Lower bearing screws (3)	7950	**1.72**
Lower bearing all stainless screws (3)	9902	**1.72**

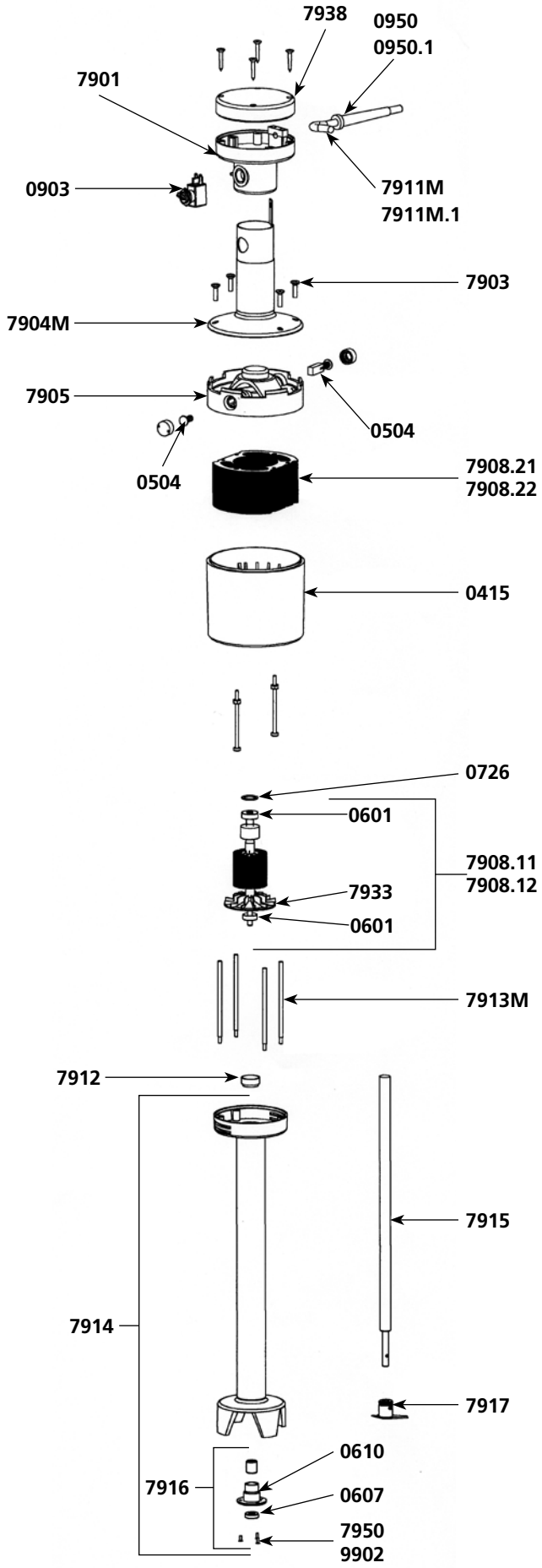

IMPORTANT : *Each spare part order must include the type and the number of the product which appears on the identification plate.*

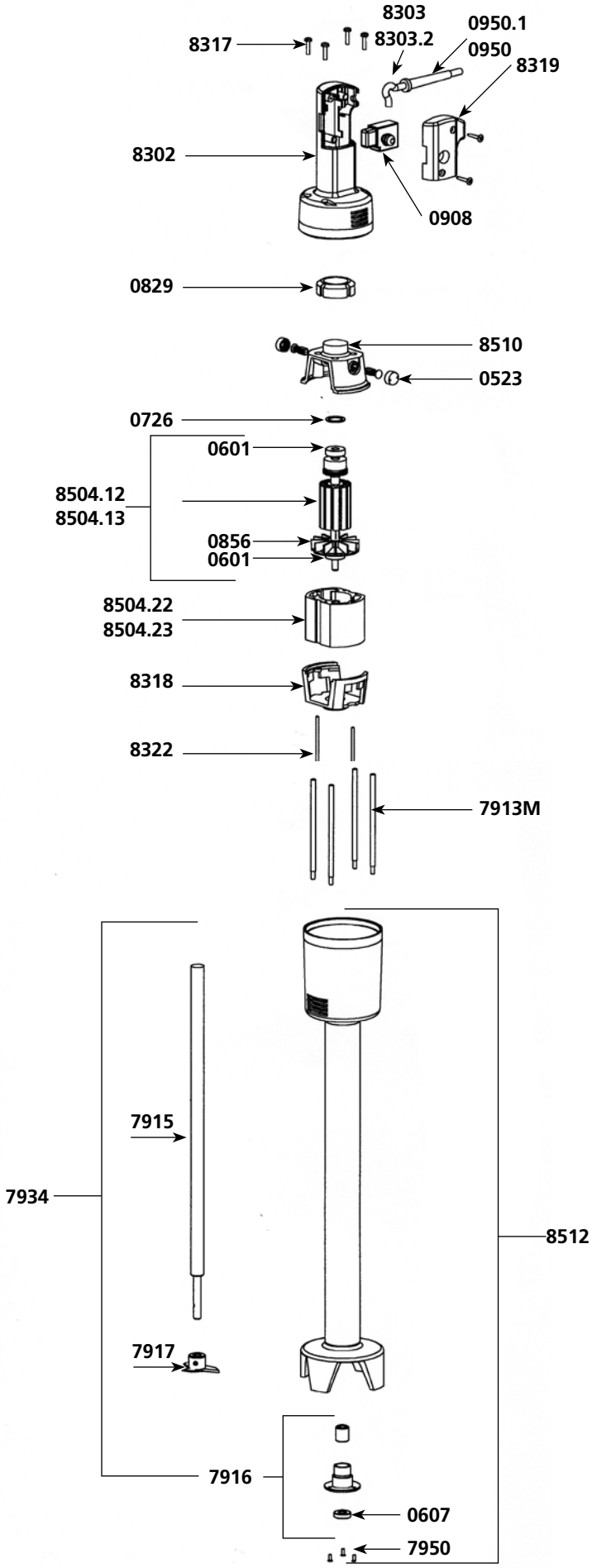

Parts list	Code	List $ Price
Motor brushes (2)	0523	**19.61**
Ball bearing	0601	**19.61**
Waterproof seal	0607	**25.60**
O. ring	0610	**2.75**
Squeezing washer	0726	**2.75**
Motor self-lubricating ring	0829	**29.74**
Fan	0856	**12.54**
Hook	0860	**10.74**
Non-locking switch	0908	**41.06**
Capacitor	0909	**17.39**
Strain relief 230 V	0950	**3.44**
Strain relief 115 V	0950.1	**3.44**
Brace (4)	7913M	**22.12**
Shaft	7915	**102.82**
Lower bearing assembly	7916	**47.53**
Cutter blade w/screw	7917	**51.95**
Shaft. lower bearing & cutter assembly	7934	**177.13**
Lower bearing screws (3)	7950	**1.72**
Complete handle 230 V	8301	**104.21**
Complete handle 115 V	8301.1	**104.21**
Handle only w/screws	8302	**56.99**
Power cord 230 V	8303	**40.93**
Power cord 115 V	8303.2	**48.69**
Spacer screws (4)	8317	**6.37**
Lower motor casing	8318	**18.08**
Cover for handle	8319	**13.54**
Ground wire	8321	**7.59**
Screws w/ ground washer	8322	**1.19**
Motor 230 V	8504	**574.45**
Motor 115 V	8504.1	**574.45**
Rotor 230 V	8504.12	**313.32**
Rotor 115 V	8504.13	**313.32**
Stator 230 V	8504.22	**330.22**
Stator 115 V	8504.23	**330.22**
Upper motor casing (w/carbon brushes holder)	8510	**70.52**
Foot assembly w/ lower ball bearing assembly	8512	**428.89**

Tel. 1.800.267.7794
Fax : 1.877.668.6623

www.dynamicmixersusa.com
e-mail : info@dynamicmixers.com

Parts list	Code	List $ Price
Motor brushes (2)	0504	**19.61**
Ball bearing	0601	**19.61**
Waterproof seal	0607	**25.60**
Squeezing washer	0726	**2.75**
Lock button return spring	0767	**5.81**
Safety button return spring	0768	**5.42**
Wall bracket	0881	**11.45**
Long wall bracket	0881.L	**14.00**
Strain relief 230 V	0950	**3.44**
Strain relief 115 V	0950.1	**3.44**
Switch (230 V / 115 V)	0965	**52.09**
Capacitor (115V)	0972	**19.41**
Capacitor + filter (230V)	0972.1	**22.58**
Warning label	1017	**6.90**
Dynamic label	1027	**17.11**
Label w/ serial number 230 V	1028	**7.17**
Label w/ serial number 115 V	1029	**7.17**
Bering holder + seal	1186	**29.33**
Emulsifying blade	7910	**83.05**
Lower bearing assembly	7916	**47.53**
Cutter blade	7917	**51.95**
Fan	7933	**12.50**
Lower bearing screws (3)	7950	**1.72**
Spacer screws (4)	8317	**6.37**
Upper half handle (button side)	9002	**76.75**
Safety switch	9005	**4.17**
Locking switch	9007	**3.98**
Rotor 115 V	9008.11	**312.65**
Rotor 230 V	9008.12	**312.65**
Plug	9009	**4.17**
Control lever	9010	**18.01**
Power cord 230 V	9011	**30.44**
Handle screws (4)	9014	**0.91**
Motor housing brush holder	9015	**103.93**
Stator 230 V	9016	**277.90**
Motor field screws (2)	9023	**5.18**
Ball bearing sleeve	9025	**5.98**
Spacer rods (4)	9026	**22.12**
Stator 115 V	9038	**277.90**
Power cord 115 V	9040	**38.09**
Motor brush wires 230 V	9043	**13.08**
Complete handle w/ power cord 230 V	9100	**221.83**
Complete handle w/ power cord 115 V	9100.1	**221.83**
Half handle. label side (230V)	9101	**80.31**
Half handle. label side (115V)	9101.1	**80.31**
Speed control plug	9112	**2.81**
Complete foot assembly	9129	**533.26**
Foot assembly w/ bearing assembly	9130	**379.52**
Fitted shaft	9131	**102.82**
Carbon brush wires 115 V	9143	**13.08**
Shaft. lower bearing & cutter assembly	9164	**181.91**
Lower bearing screws (3)	9902	**1.72**

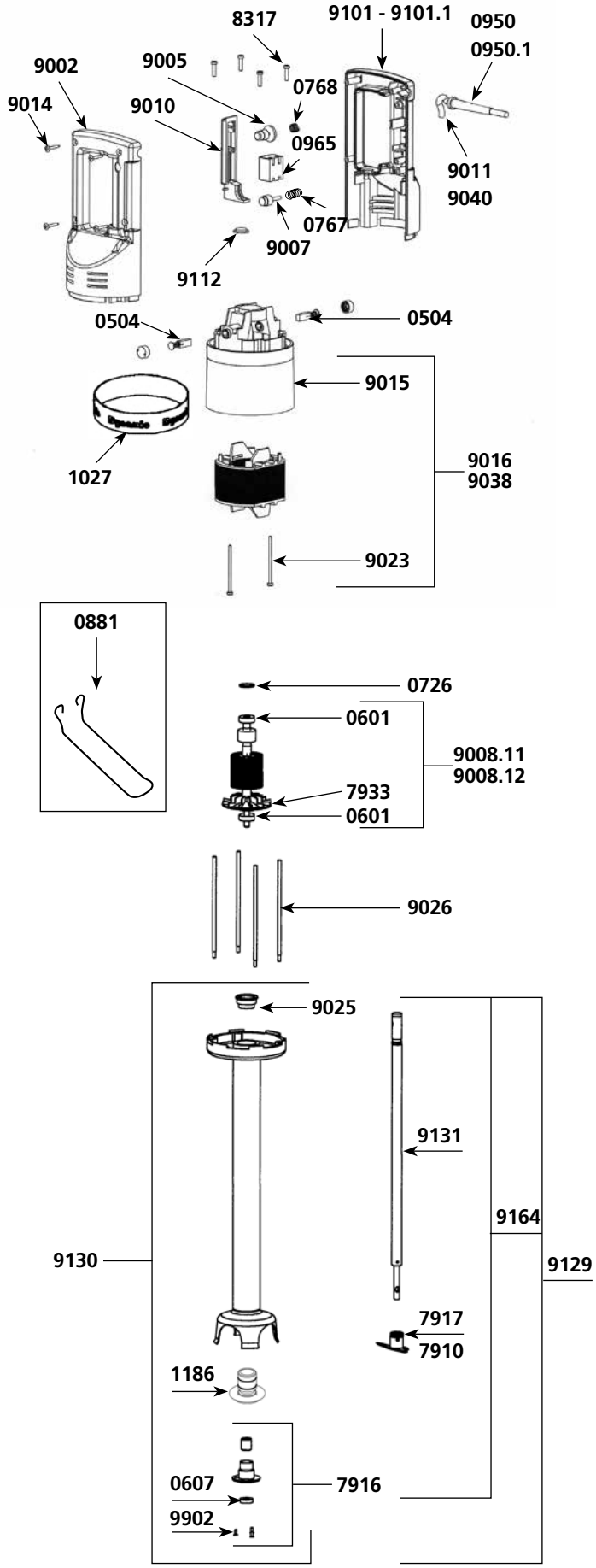

IMPORTANT : *Each spare part order must include the type and the number of the product which appears on the identification plate.*

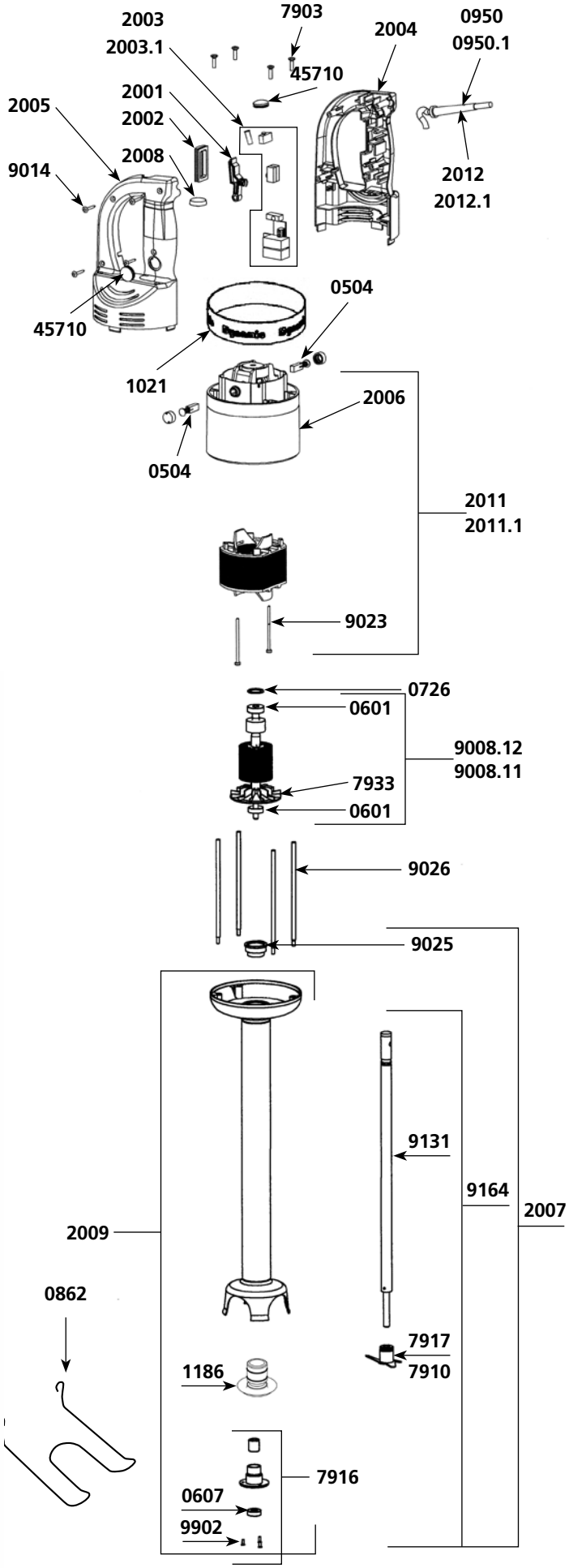

Parts list	Code	List $ Price
Motor brushes (2)	0504	**19.61**
Ball bearing	0601	**19.61**
Waterproof seal	0607	**25.60**
Squeezing washer	0726	**2.75**
Safety button return spring	0768	**5.42**
Wall bracket	0862	**28.71**
Strain relief 230 V	0950	**3.44**
Strain relief 115 V	0950.1	**3.44**
Filter	0999.20	**22.20**
Warning label	1017	**6.90**
Dynamic label	1021	**17.11**
Label w/ serial number 230 V	1067	**7.06**
Label w/ serial number 115 V	1068	**7.06**
Lower bearing assembly support	1186	**29.33**
Micro switch	1237	**15.33**
Power on indicator light 230 V	1241	**8.36**
Power on indicator light 115 V	1241.1	**8.36**
Control lever	2001	**14.21**
Safety control lever	2002	**8.44**
Circuit board 230 V (4 switches + capacitor)	2003	**172.33**
Circuit board 115 V (4 switches + capacitor)	2003.1	**172.33**
Upper half handle (no button)	2004	**73.63**
Lower half handle (button side)	2005	**73.63**
Motor housing brush holder	2006	**102.82**
Complete foot assembly	2007	**527.99**
Speed control plug	2008	**2.81**
Foot assembly w/ bearing assembly	2009	**368.19**
Complete handle w/ power cord 230 V	2010	**361.93**
Complete handle w/ power cord 115 V	2010.1	**361.93**
Stator 230 V	2011	**283.46**
Stator 115 V	2011.1	**283.46**
Power cord 230 V > 2002	2012	**40.05**
Power cord 115 V > 2002	2012.1	**40.05**
Spacer screws (4)	7903	**6.37**
Emulsifying blade	7910	**83.05**
Lower bearing assembly	7916	**47.53**
Cutter blade w/screw	7917	**51.95**
Fan	7933	**12.50**
Rotor 115 V	9008.11	**312.65**
Rotor 230 V	9008.12	**312.65**
Power cord 230 V < 2002	9011	**30.44**
Handle screws (4)	9014	**0.91**
Motor field screws (2)	9023	**5.18**
Ball bearing sleeve	9025	**5.98**
Spacers rods (4)	9026	**22.12**
Power cord 115 V < 2002	9040	**38.09**
Carbon brush wires 230 V	9043	**13.08**
Fitted shaft	9131	**102.82**
Carbon brush wires 115 V	9143	**13.08**
Shaft. lower bearing & cutter assembly	9164	**181.91**
Lower bearing screws (3)	9902	**1.72**
Rubber button cap	45710	**4.26**

Tel. 1.800.267.7794
Fax : 1.877.668.6623

www.dynamicmixersusa.com
e-mail : info@dynamicmixers.com

Motor

Parts list	Code	List $ Price
Motor brushes (2)	0504	**19.61**
Ball bearing	0601	**19.61**
Squeezing washer	0726	**2.75**
Lock button return spring	0767	**5.81**
Safety button return spring	0768	**5.42**
Strain relief 230 V	0950	**3.44**
Strain relief 115 V	0950.1	**3.44**
Switch	0965	**52.09**
Capacitor	0972	**19.41**
Capacitor + filter	0972.1	**22.58**
Warning label	1017	**6.90**
Dynamic label	1027	**17.11**
ID label 230 V	1054	**7.17**
ID label 115 V	1055	**7.17**
Fan	7933	**12.50**
Spacer screws (4)	8317	**6.37**
Half handle (button side)	9002	**76.75**
Rubber button cap	9005	**4.17**
Lock button	9007	**3.98**
Rotor 115 V	9008.11	**312.65**
Rotor 230 V	9008.12	**312.65**
Plug	9009	**4.17**
Control lever	9010	**18.01**
Power cord 230 V	9011	**30.44**
Handle screws (4)	9014	**0.91**
Motor housing brush holder	9015	**103.93**
Stator 230 V	9016	**277.90**
Motor field screws (2)	9023	**5.18**
Lower aluminum housing	9024	**185.32**
Ball bearing sleeve	9025	**5.98**
Spacer rods (4)	9026	**22.12**
Coupler for armature	9028	**13.08**
Stator 115 V	9038	**277.90**
Power cord 115 V	9040	**38.09**
Ground wire 230 V	9043	**13.08**
Speed control plug	9112	**2.81**
Ground wire 115 V	9143	**13.08**
Complete handle 230 V	9900	**221.83**
Complete handle 115 V	9900.1	**221.83**
230 V Half handle (label side)	9903	**78.69**
115 V Half handle (label side)	9903.1	**78.69**

FOR FOOT ATTACHMENT, REFERENCE PAGE 34

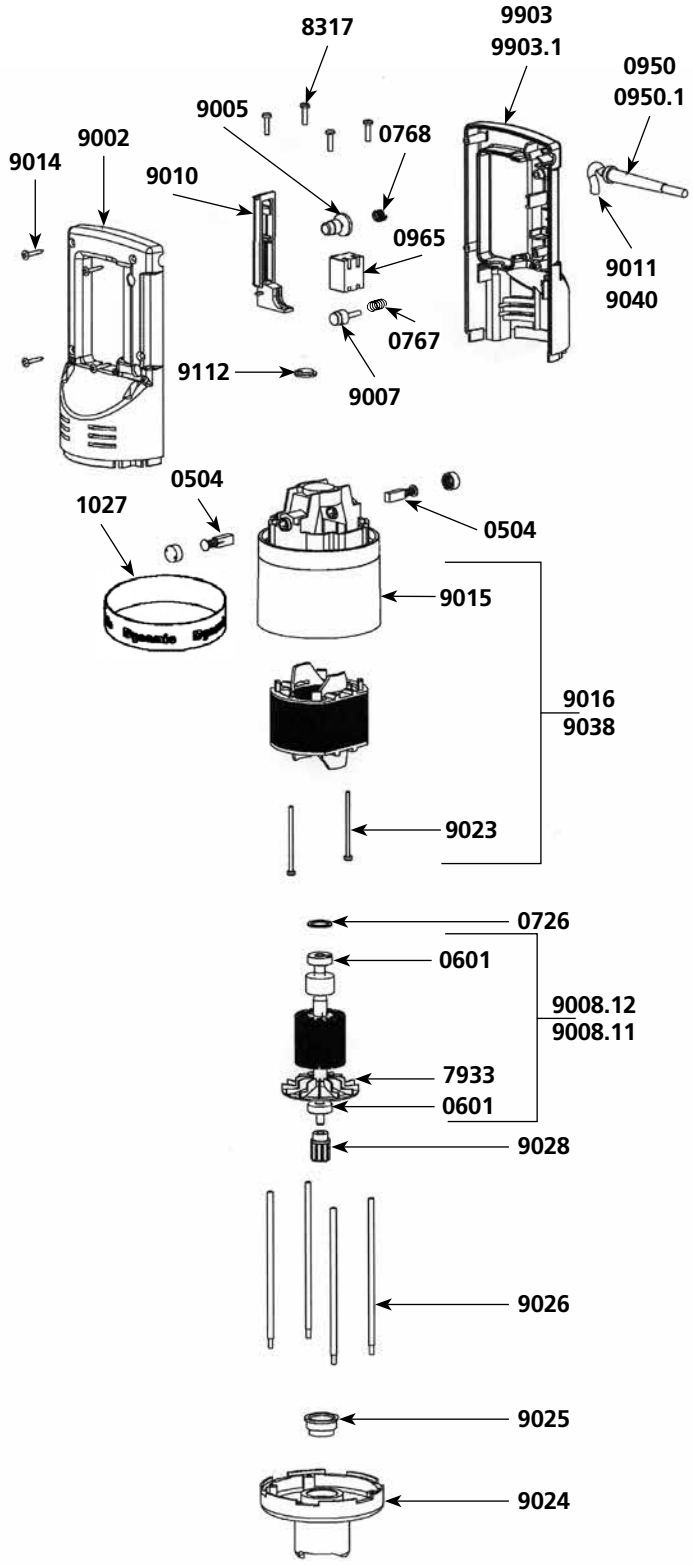

IMPORTANT : *Each spare part order must include the type and the number of the product which appears on the identification plate.*

Motor

Parts list	Code	List $ Price
Motor brushes (2)	0504	**19.61**
Ball bearing	0601	**19.61**
Squeezing washer	0726	**2.75**
Safety button return spring	0768	**5.42**
Strain relief 230 V	0950	**3.44**
Strain relief 115 V	0950.1	**3.44**
C.E.M. Filter	0999.20	**22.20**
Warning label	1017	**6.90**
Dynamic label	1021	**17.11**
ID label 230 V	1075	**7.06**
ID label 115 V	1076	**7.06**
Micro switch	1237	**15.33**
Power on indicator light 230 V	1241	**8.36**
Power on indicator light 115 V	1241.1	**8.36**
Control lever	2001	**14.21**
Control lever protector	2002	**8.44**
Circuit board 230 V (4 switches + capacitor)	2003	**172.33**
Circuit board 115 V (4 switches + capacitor)	2003.1	**172.33**
Half handle (no button)	2004	**73.63**
Half handle (button side)	2005	**73.63**
Motor housing brush holder	2006	**102.82**
Speed control plug	2008	**2.81**
Complete handle 230 V	2010	**361.93**
Complete handle 115 V	2010.1	**361.93**
Stator 230 V (0504 not included)	2011	**283.46**
Stator 115 V (0504 not included)	2011.1	**283.46**
Power cord 230 V > 2002	2012	**40.05**
Power cord 115 V > 2002	2012.1	**40.05**
Lower aluminum housing	2020	**189.01**
Speed variator knob	2021	**5.57**
Complete handle 230 V with variator (from N°040132)	2022	**361.93**
Complete handle 115 V with variator (from N°040132)	2022.1	**361.93**
Speed variator 230 V	2023	**132.10**
Speed Variator 115 V	2023.1	**132.10**
Spacer screws (4)	7903	**6.37**
Fan	7933	**12.50**
Rotor 115 V	9008.11	**312.65**
Rotor 230 V	9008.12	**312.65**
Power cord 230 V < 2002	9011	**30.44**
Handle screws (4)	9014	**0.91**
Motor field screws (2)	9023	**5.18**
Motor ball bearing sleeve	9025	**5.98**
Spacer rods (4)	9026	**22.12**
Coupler for armature	9028	**13.08**
Power cord 115 V < 2002	9040	**38.09**
Carbons brush wires 230 V	9043	**13.08**
Power cord (Australian) < 2002	9066	**76.35**
Carbons brush wires 115 V	9143	**13.08**
Rubber button cap	45710	**4.26**

FOR FOOT ATTACHMENT, REFERENCE PAGE 34

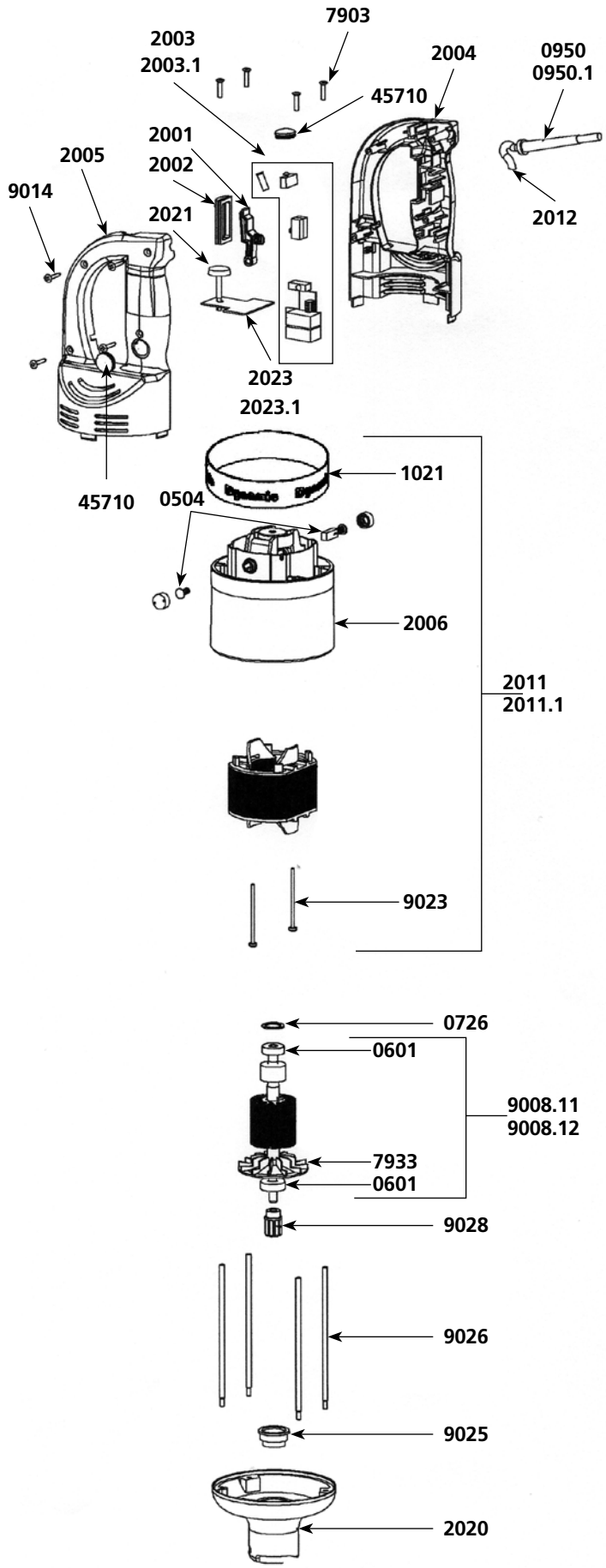

Tel. 1.800.267.7794
Fax : 1.877.668.6623

www.dynamicmixersusa.com
e-mail : info@dynamicmixers.com

Motor

Parts list	Code	List $ Price
Motor brushes (2)	0504	**19.61**
Ball bearing	0601	**19.61**
Squeezing washer	0726	**2.75**
Safety button return spring	0768	**5.42**
Strain relief 230 V	0950	**3.44**
Strain relief 115 V	0950.1	**3.44**
C.E.M. Filter	0999.20	**22.20**
Warning label	1017	**6.90**
Dynamic label	1021	**17.11**
ID label 230 V	1075	**7.06**
ID label 115 V	1076	**7.06**
Micro switch	1237	**15.33**
Power on indicator light 230 V	1241	**8.36**
Power on indicator light 115 V	1241.1	**8.36**
Control lever	2001	**14.21**
Control lever protector	2002	**8.44**
Circuit board 230 V (4 switches + capacitor)	2003	**172.33**
Circuit board 115 V (4 switches + capacitor)	2003.1	**172.33**
Half handle (no button)	2004	**73.63**
Half handle (button side)	2005	**73.63**
Motor housing brush holder	2006	**102.82**
Speed control plug	2008	**2.81**
Complete handle 230 V	2010	**361.93**
Complete handle 115 V	2010.1	**361.93**
Stator 230 V (0504 not included)	2011	**283.46**
Stator 115 V (0504 not included)	2011.1	**283.46**
Power cord 230 V > 2002	2012	**40.05**
Power cord 115 V > 2002	2012.1	**40.05**
Lower aluminum housing	2020	**189.01**
Speed variator knob	2021	**5.57**
Complete handle 230 V with variator (from N°040132)	2022	**361.93**
Complete handle 115 V with variator (from N°040132)	2022.1	**361.93**
Speed variator 230 V	2023	**132.10**
Speed Variator 115 V	2023.1	**132.10**
Spacer screws (4)	7903	**6.37**
Fan	7933	**12.50**
Rotor 115 V	9008.11	**312.65**
Rotor 230 V	9008.12	**312.65**
Power cord 230 V < 2002	9011	**30.44**
Handle screws (4)	9014	**0.91**
Motor field screws (2)	9023	**5.18**
Motor ball bearing sleeve	9025	**5.98**
Spacer rods (4)	9026	**22.12**
Coupler for armature	9028	**13.08**
Power cord 115 V < 2002	9040	**38.09**
Carbons brush wires 230 V	9043	**13.08**
Power cord (Australian) < 2002	9066	**76.35**
Carbons brush wires 115 V	9143	**13.08**
Rubber button cap	45710	**4.26**

FOR FOOT ATTACHMENT, REFERENCE PAGE 34

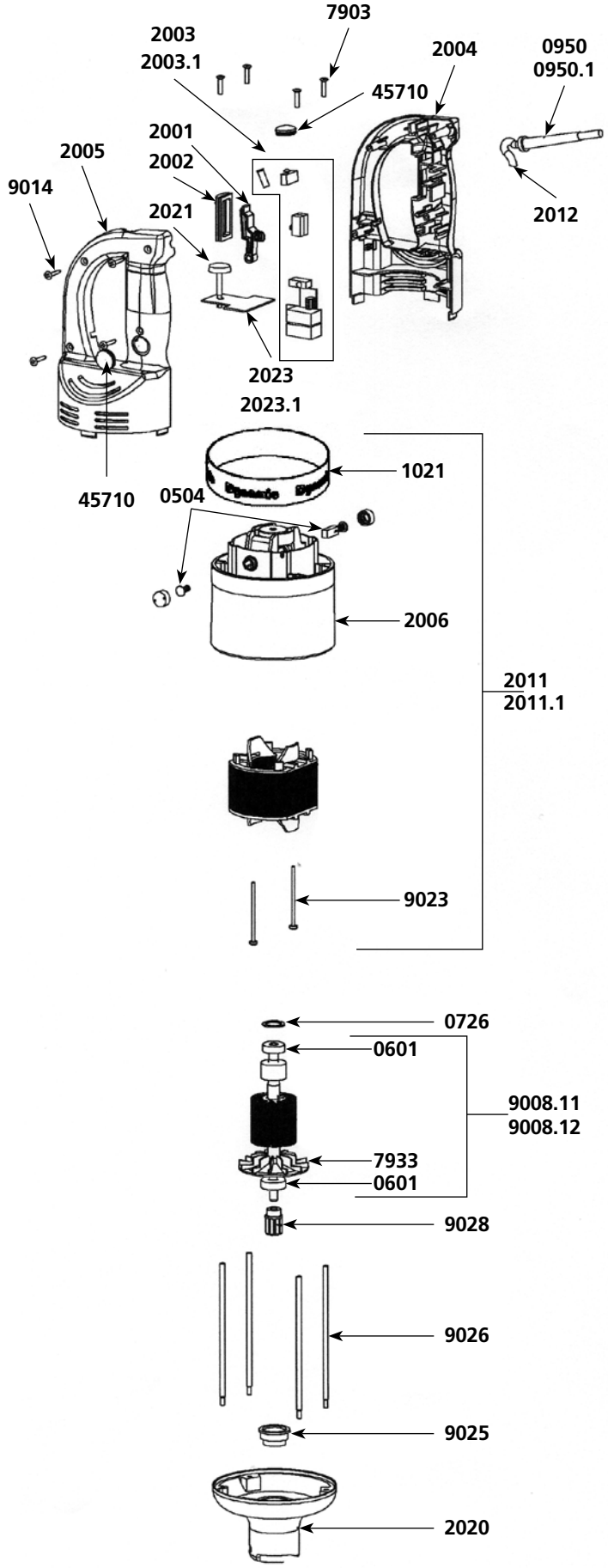

IMPORTANT : *Each spare part order must include the type and the number of the product which appears on the identification plate.*

Parts list	Code	List $ Price
Motor brushes (2)	0504	**19.61**
Ball bearing	0601	**19.61**
Waterproof seal	0607	**25.60**
Squeezing washer	0726	**2.75**
Wall bracket	0862	**28.71**
Strain relief 230 V	0950	**3.44**
Strain relief 115 V	0950.1	**3.44**
Warning label	1017	**6.90**
Dynamic label	1021	**17.11**
ID label 115 V	1097	**7.06**
ID label 230 V	1099.15	**7.06**
Bearing holder + seal	1186	**29.33**
Control lever	2001	**14.21**
Safety control lever	2002	**8.44**
230 V electronic circuit board	2003DSC	**335.13**
115 V electronic circuit board	2003.1DSC	**335.13**
Half handle (no button)	2004	**73.63**
Half handle (button side)	2005	**73.63**
Motor housing brush holder	2006DSC	**102.82**
Complete foot assembly	2007	**527.99**
Foot assembly	2009	**368.19**
Stator 230 V	2011DSC	**283.46**
Stator 115 V	2011.1DSC	**283.46**
Power cord 230 V	2012	**40.05**
Power cord 115 V	2012.1	**40.05**
Variable speed control button	2021	**5.57**
Complete handle 230 V	2060	**312.74**
Complete handle 115 V	2060.1	**312.74**
Sensoring washer (washers. magnets. screws. small brace)	2061	**24.14**
Spacer screws (4)	7903	**6.37**
Emulsifying blade	7910	**83.05**
Lower bearing assembly	7916	**47.53**
Spacer cutter blade	7917	**51.95**
Fan	7933	**12.50**
Rotor 115 V	9008.11DSC	**312.65**
Rotor 230 V	9008.12DSC	**312.65**
Handle screws (4)	9014	**0.91**
Motor field screws (2)	9023	**5.18**
Motor ball bearing sleeve	9025	**5.98**
Spacer rods (4)	9026	**22.12**
Carbon brush wires (2) (230 V)	9043	**13.08**
Fitted shaft	9131	**102.82**
Carbon brush wires (2) (115 V)	9143	**13.08**
Shaft. lower ball bearing & cutter assembly	9164	**181.91**
Lower bearing screws (3)	9902	**1.72**
Rubber button cap	45710	**4.26**

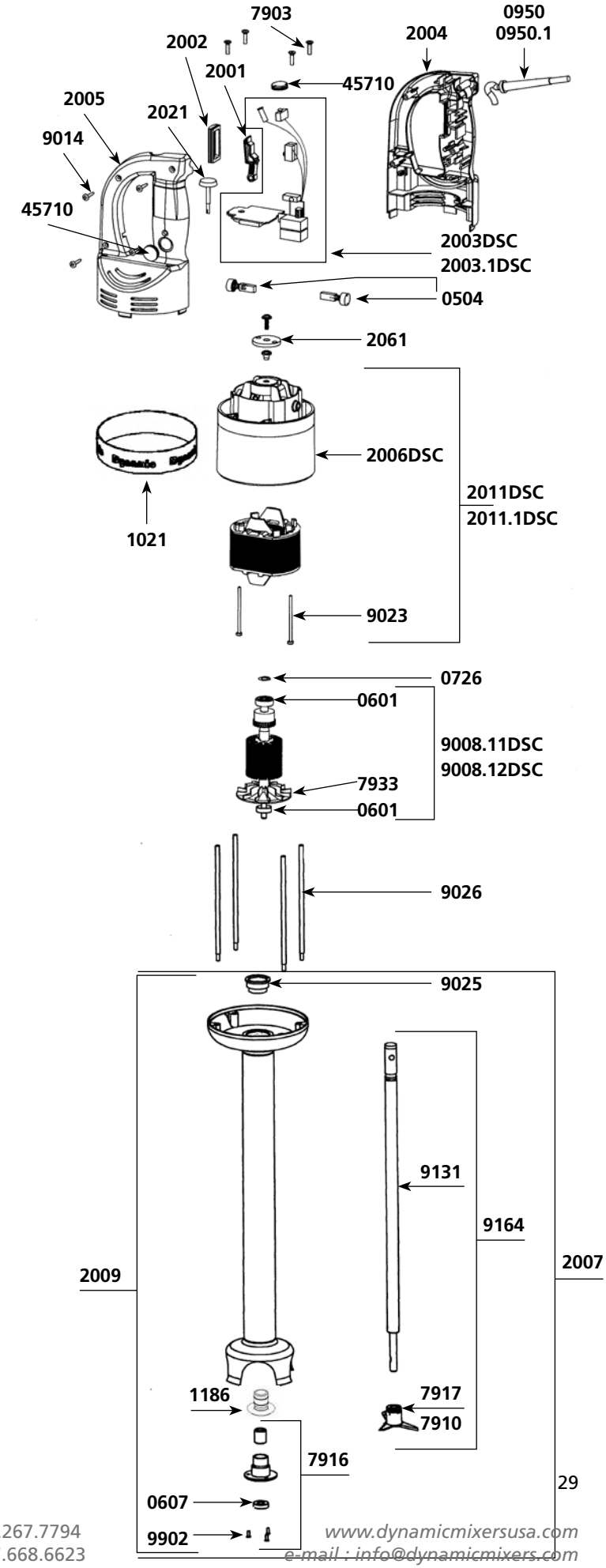

Tel. 1.800.267.7794
Fax : 1.877.668.6623
www.dynamicmixersusa.com
e-mail : info@dynamicmixers.com

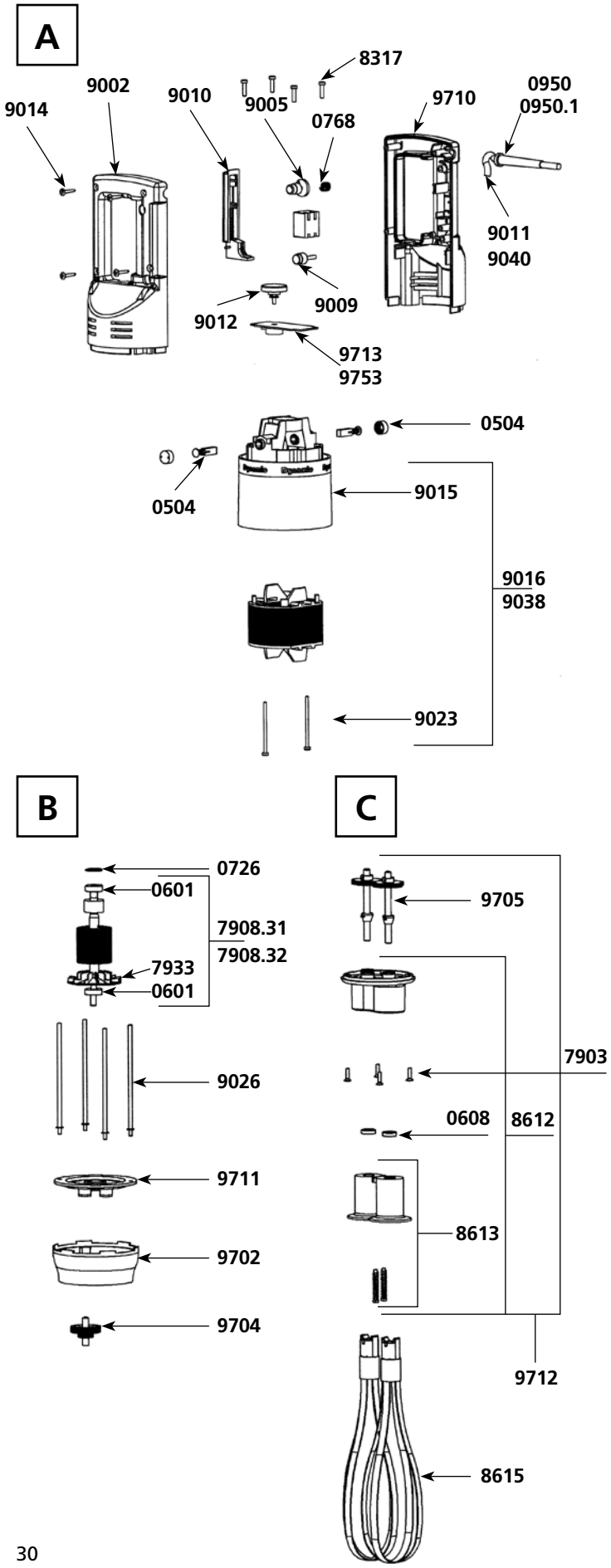

Parts list	Code	List $ Price
Motor brushes (2)	0504	**19.61**
Ball bearing	0601	**19.61**
Waterproof seal	0608	**26.32**
Squeezing washer	0726	**2.75**
Pin 3 X 20	0744	**3.05**
Pin 3 X 14	0745	**2.75**
Safety button return spring	0768	**5.42**
Wall bracket	0881	**11.45**
Strain relief 230 V	0950	**3.44**
Strain relief 115 V	0950.1	**3.44**
Switch 230 V	0964	**52.09**
Switch 115 V	0965	**52.09**
Capacitor	0972	**19.41**
Capacitor + filter	0972.1	**22.58**
ID label 115 V	1019	**7.17**
ID label 230 V	1020	**7.17**
Dynamic label	1027	**17.11**
Spacer screws (4)	7903	**6.37**
Rotor 115 V	7908.31	**312.65**
Rotor 230 V	7908.32	**312.65**
Fan	7933	**12.50**
Spacer screws (4)	8317	**6.37**
Holder + plastic ejector + seal (7903 not included)	8612	**89.41**
Plastic ejector (pair)	8613	**38.17**
Whisk (pair)	8615	**203.98**
Half handle (button side)	9002	**76.75**
Rubber button cap	9005	**4.17**
Plug	9009	**4.17**
Control lever	9010	**18.01**
Power cord 230 V	9011	**30.44**
Variable speed control button	9012	**5.57**
Handle screws (4)	9014	**0.91**
Motor housing brush holder	9015	**103.93**
Stator 230 V	9016	**277.90**
Motor field screws (2)	9023	**5.18**
Spacer rods (4)	9026	**22.12**
Stator 115 V	9038	**277.90**
Power cord 115 V	9040	**38.09**
Carbon brush wires 2 (230 V)	9043	**13.08**
Carbon brushe wires 2 (115 V)	9143	**13.08**
Lower aluminum housing	9702	**204.20**
Middle gear & shaft	9704	**139.63**
Output gear & shaft + Pins	9705	**129.57**
Complete handle 230 V	9706	**333.46**
Complete handle 115 V	9706.1	**333.46**
Half handle label side 230 V	9710	**78.69**
Half handle label side 115 V	9710.1	**78.69**
Plate w/ 3 seals	9711	**47.77**
Holder without gear (7903 not included)	9712	**335.68**
Variable speed control board 230 V	9713	**131.99**
Variable speed control board 115 V	9753	**131.99**

IMPORTANT : *Each spare part order must include the type and the number of the product which appears on the identification plate.*

Parts list	Code	List $ Price
Motor brushes (2)	0523	**19.61**
Ball bearing	0601	**19.61**
Waterproof seal	0608	**26.32**
Squeezing washer	0726	**2.75**
Pin 3 X 20	0744	**3.05**
Pin 3 X 14	0745	**2.75**
Motor bushing	0829	**29.74**
Fan	0856	**12.54**
Hook	0860	**10.74**
Non-locking switch	0908	**41.06**
Capacitor	0909	**17.39**
Strain relief 230 V	0950	**3.44**
Strain relief 115 V	0950.1	**3.44**
Spacer screws (4)	7903	**6.37**
Brace	7913M	**22.12**
Power cord 230 V	8303	**40.93**
Power cord (UK)	8303.1	**40.93**
Spacer screws (4)	8317	**6.37**
Lower motor housing	8318	**18.08**
Top handle screws	8319	**13.54**
Ground wire	8321	**7.59**
Screws with ground washers (2)	8322	**1.19**
Motor housing brush holder	8510	**70.52**
Complete handle 230 V	8601	**173.64**
Handle only + cap + screws	8602	**56.99**
Equipped motor	8604	**574.45**
Variable speed control board 230 V	8608	**135.95**
Variator knob w/clips	8609	**19.12**
Middle gear & shaft	8610	**142.77**
Output gear & shaft	8611	**80.91**
Holder + 2 plastic ejectors + 2 seals + 3 rings	8612	**89.41**
Plastic ejector (pair)	8613	**38.17**
Lower aluminum housing	8614	**239.25**
Whisk only (pair)	8615	**203.98**
Complete axles. support. cones and pignons	8616	**336.42**
Stator 230 V	8617	**313.32**
Rotor 230 V	8618	**330.22**

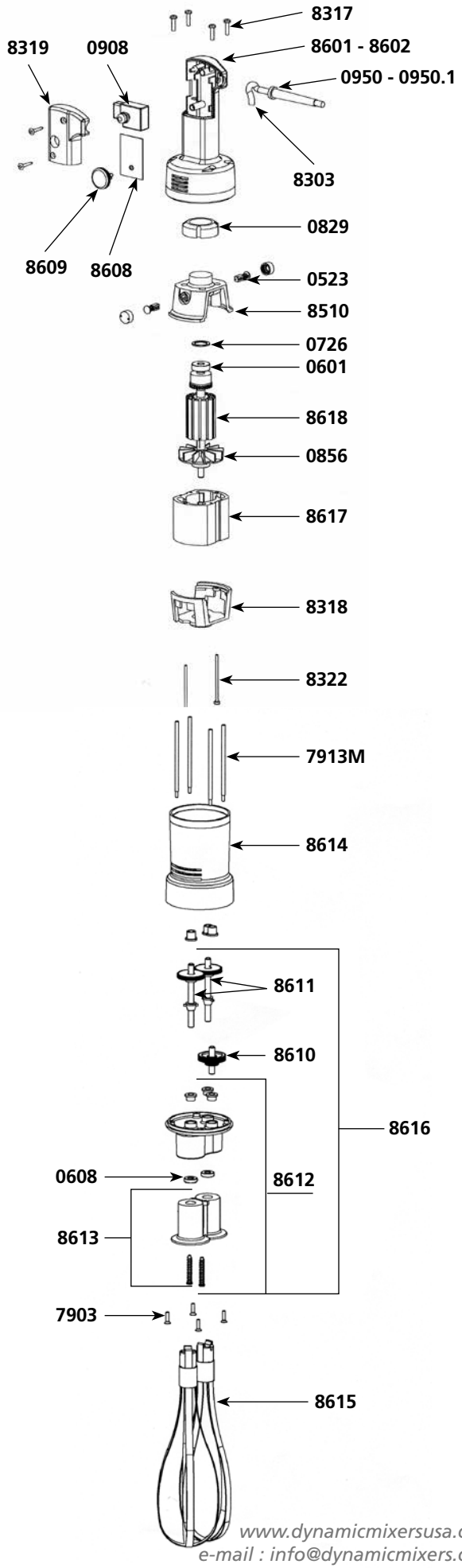

Tel. 1.800.267.7794
Fax : 1.877.668.6623

www.dynamicmixersusa.com
e-mail : info@dynamicmixers.com

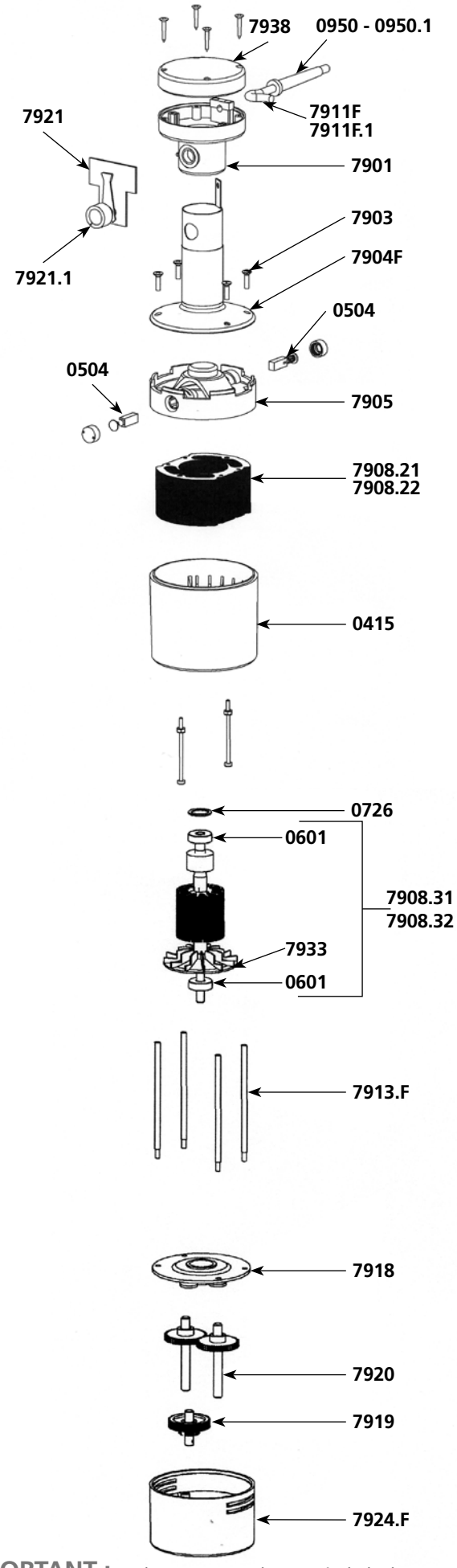

Parts list	Code	List $ Price
Sleeve	0415	**46.44**
Motor brushes (2)	0504	**19.61**
Ball bearing	0601	**19.61**
Waterproof seal	0608	**26.32**
Squeezing washer	0726	**2.75**
Pin 3 x 20	0744	**3.05**
Pin 3 x 14	0745	**2.75**
Strain relief 230 V	0950	**3.44**
Strain relief 115 V	0950.1	**3.44**
Complete handle	7901	**62.51**
Spacer screws (4)	7903	**6.37**
ID plate 230 V	7904 F	**67.41**
Motor housing brush holder	7905	**58.56**
Stator 115 V	7908.21	**329.51**
Stator 230 V	7908.22	**329.51**
Motor 230 V	7908.3	**522.96**
Rotor 115 V	7908.31	**312.65**
Rotor 230 V	7908.32	**312.65**
Motor 115 V	7908.4	**522.96**
Power cord 230 V	7911 F	**40.93**
Power cord 115 V	7911 F.1	**48.69**
Spacer rods	7913.F	**22.12**
Plate assembly with 3 bronze seals	7918	**59.72**
Middle gear & shaft	7919	**142.45**
Output gear & shaft	7920	**80.74**
Variable speed control board	7921	**173.64**
Speed control plug	7921.1	**16.62**
Holder assembly w/ 3 self lubricating rings	7922	**59.72**
Plastic protector	7923	**21.03**
Lower housing	7924 F	**145.93**
Whisk (pair)	7925	**203.98**
Capacitor	7931	**17.39**
Fan	7933	**12.50**
Top handle w/screws	7938	**25.45**

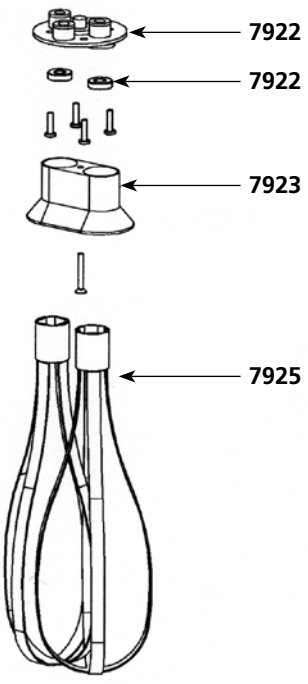

IMPORTANT : *Each spare part order must include the type and the number of the product which appears on the identification plate.*

Parts list	Code	List $ Price
Motor brushes (2)	0504	**19.61**
Ball bearing	0601	**19.61**
Squeezing washer	0726	**2.75**
Lock button return spring	0767	**5.81**
Safety button. return spring	0768	**5.42**
Strain relief 230 V	0950	**3.44**
Strain relief 115 V	0950.1	**3.44**
Switch 230V	0964	**52.09**
Switch 115V	0965	**52.09**
Capacitor	0970	**29.33**
Capacitor + filter	0972.1	**22.58**
Warning label	1017	**6.90**
Dynamic label	1027	**17.11**
ID label 230 V	1030	**7.17**
ID label 115 V	1031	**7.17**
Fan	7933	**12.50**
Spacer screws (4)	8317	**6.37**
Complete handle 230 V	9000	**333.46**
Complete handle 115 V	9000.1	**333.46**
Lower half handle (label side) 230 V	9001	**78.69**
Lower half handle (label side) 115 V	9001.1	**78.69**
Upper half handle (button side)	9002	**76.75**
Rubber button cap	9005	**4.17**
Lock button	9007	**3.98**
Rotor 115 V	9008.11	**312.65**
Rotor 230 V	9008.12	**312.65**
Plug	9009	**4.17**
Control lever	9010	**18.01**
Power cord 230 V	9011	**30.44**
Variable speed knob	9012	**5.57**
Variable speed control board 230 V	9013	**131.99**
Handle screws (4)	9014	**0.91**
Motor housing brush holder	9015	**103.93**
Stator 230 V w/carter. motor brush holders not included	9016	**277.90**
Motor field screws (2)	9023	**5.18**
Lower aluminum housing	9024	**185.32**
Ball bearing sleeve	9025	**5.98**
Sapcer rods (4)	9026	**22.12**
Coupler for armature	9028	**13.08**
Stator 115 V w/carter. carbon brush holders	9038	**277.90**
Power cord 115 V	9040	**38.09**
Carbon brush wires 230 V	9043	**13.08**
Variable speed control board 115 V	9053	**131.99**
Motor brush wires 115 V	9143	**13.08**

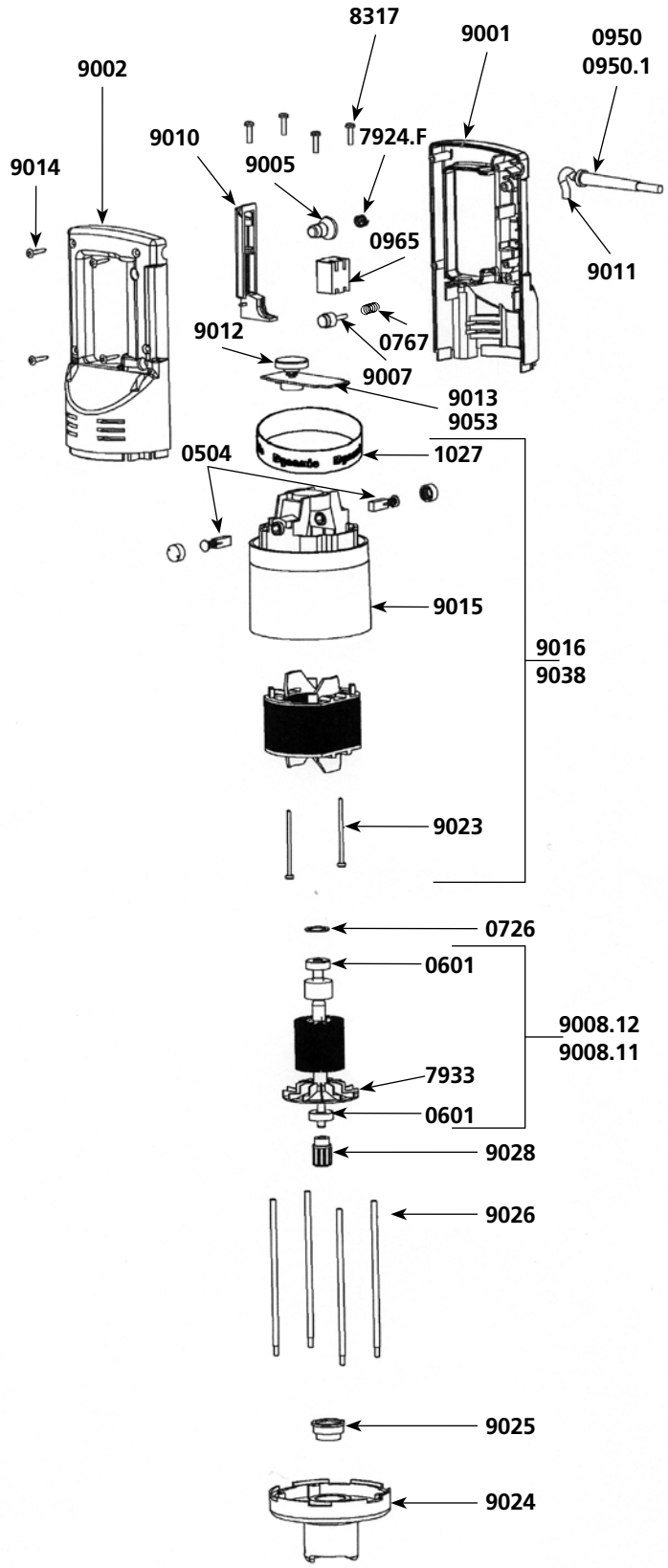

Tel. 1.800.267.7794
Fax : 1.877.668.6623

www.dynamicmixersusa.com
e-mail : info@dynamicmixers.com

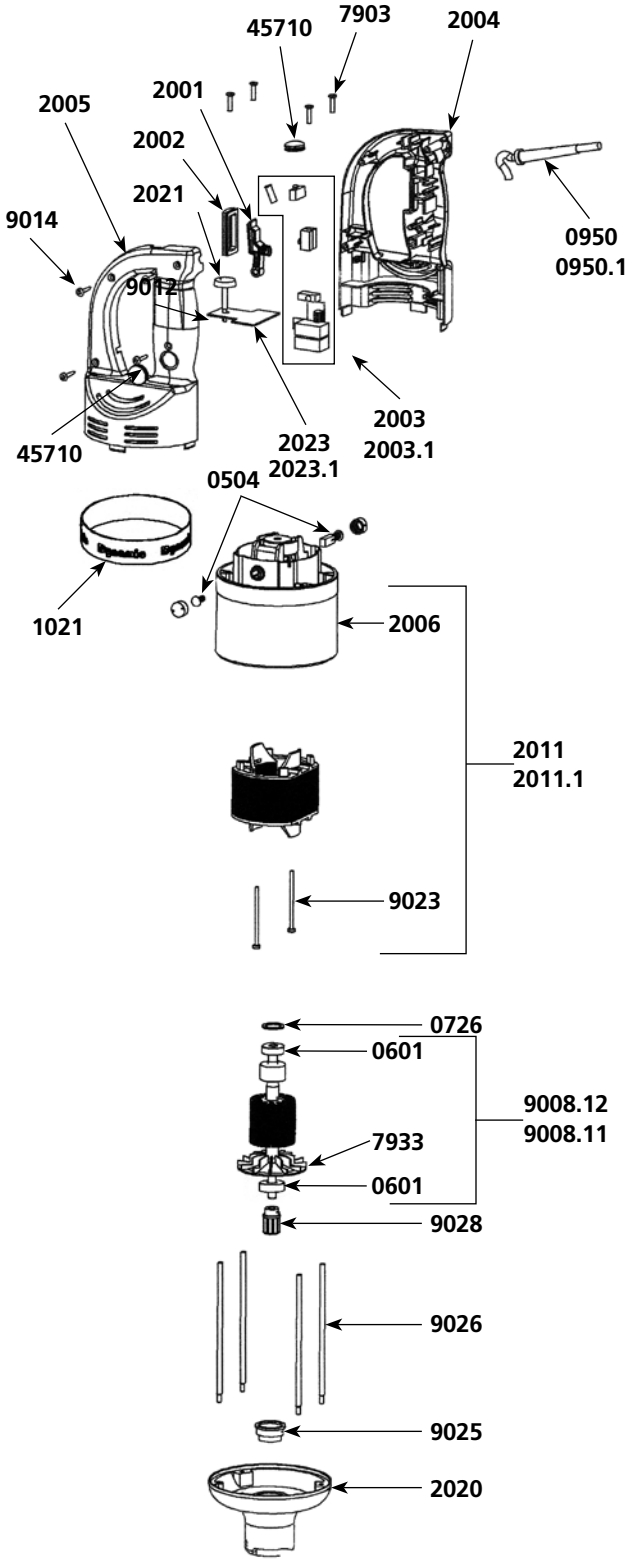

Parts list	Code	List $ Price
Motor brushes (2)	0504	**19.61**
Ball bearing	0601	**19.61**
Squeezing washer	0726	**2.75**
Safety button. return spring	0768	**5.42**
Strain relief 230 V	0950	**3.44**
Strain relief 115 V	0950.1	**3.44**
Filter C.E.M. 230 V	0999.20	**22.20**
Warning label	1017	**6.90**
Dynamic label	1021	**17.11**
ID label 230 V	1069	**7.06**
ID label 115 V	1070	**7.06**
Micro switch	1237	**15.33**
Power on indicator light 230 V	1241	**8.36**
Power on indicator light 115 V	1241.1	**8.36**
Control lever	2001	**14.21**
Control lever protector	2002	**8.44**
Circuit board 230 V (4 switches + capacitor)	2003	**172.33**
Circuit board 115 V (4 switches + capacitor)	2003.1	**172.33**
Half handle (no button)	2004	**73.63**
Half handle (button side)	2005	**73.63**
Motor housing + carbon brush holders	2006	**102.82**
Stator 230 V (carter + carbon brush holders)	2011	**283.46**
Stator 115 V (carter + carbon brush holders)	2011.1	**283.46**
Power cord 230 V > 2002	2012	**40.05**
Power cord 115 V > 2002	2012.1	**40.05**
Lower aluminum housing	2020	**189.01**
Variable speed knob	2021	**5.57**
Complete handle 230 V	2022	**361.93**
Complete handle 115 V	2022.1	**361.93**
Variable speed circuit board 230 V	2023	**132.10**
Variable speed circuit board 115 V	2023.1	**132.10**
Rubber button cap	45710	**4.26**
Spacer screws (4)	7903	**6.37**
Fan	7933	**12.50**
Rotor 115 V	9008.11	**312.65**
Rotor 230 V	9008.12	**312.65**
Power cord 230 V < 2002	9011	**30.44**
Handle screws (4)	9014	**0.91**
Motor field screws (2)	9023	**5.18**
Motor ball bearing sleeve	9025	**5.98**
Spacer rods (4)	9026	**22.12**
Coupler for armature	9028	**13.08**
Power cord 115 V < 2002	9040	**38.09**
Carbon brush wires 230 V	9043	**13.08**
Carbon brush wires 115 V	9143	**13.08**
BM 2000 motor block (see machine catalog)	AC001	**-**

IMPORTANT : *Each spare part order must include the type and the number of the product which appears on the identification plate.*

MF 90/2000 & MFAP 90/2000 foot

Parts list	Code	List $ Price
Ball bearing	0601	**19.61**
Waterproof seal	0607	**25.60**
Lower bearing assembly support	1186	**29.33**
Emulsifying blade	7910	**83.05**
Lower bearing assembly	7916	**47.53**
Cutter blade w/screw	7917	**51.95**
Lower bearing screws (3)	7950	**1.72**
Shaft. lower bearing & cutter assembly	9004	**234.66**
Shaft	9031	**173.64**
Coupling casing + pin	9051	**20.74**
Tube assembly	9901	**287.58**
Lower ball bearing screws inox (3)	9902	**1.72**
M 90 Complete Mixer tool (see machine catalog)	AC002	**-**

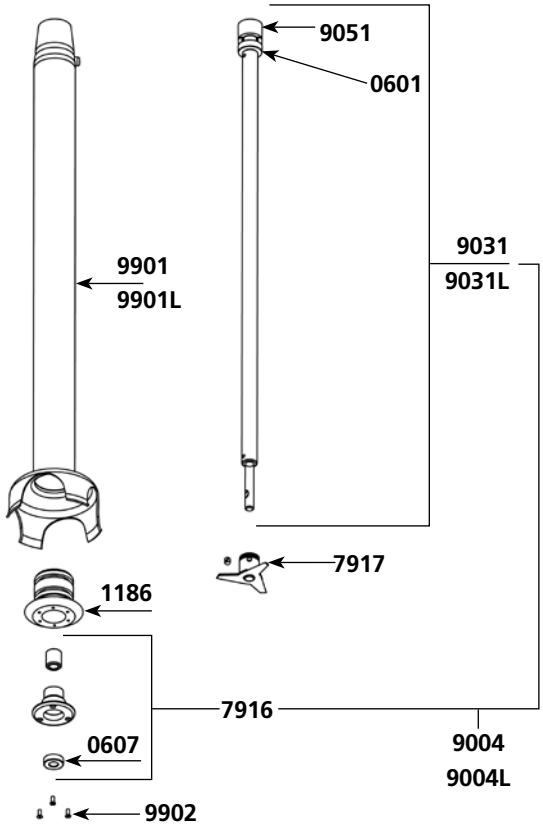

M100 foot

Parts list	Code	List $ Price
Shaft. lower bearing & cutter assembly	9004L	**269.80**
Shaft	9031L	**189.26**
Tube assembly	9901L	**328.99**

MF 90/2000 & MFAP 90/2000 whisk tool

Parts list	Code	List $ Price
Ball bearing	0601	**19.61**
Waterproof seal	0608	**26.32**
Pin 3 X 20	0744	**3.05**
Pin 3 X 14	0745	**2.75**
Spacer screws (4)	7903	**6.37**
Holder + plastic ejector + seal	8612	**89.41**
Plastic ejector (pair)	8613	**38.17**
Whisk (Pair)	8615	**203.98**
Reduction gear assembly	9034	**404.84**
Lower casing w/o middle gear	9046	**335.68**
Central double gear & shaft	9048	**142.45**
Single gear (2)	9049	**115.79**
Upper plastic casing	9050	**118.15**
Coupling casing + pin	9051	**20.74**
Equipped upper shaft	9055	**98.40**
Complete upper casing	9057	**153.52**
F 90 Complete Whisk tool (see machine catalog)	AC003	**-**

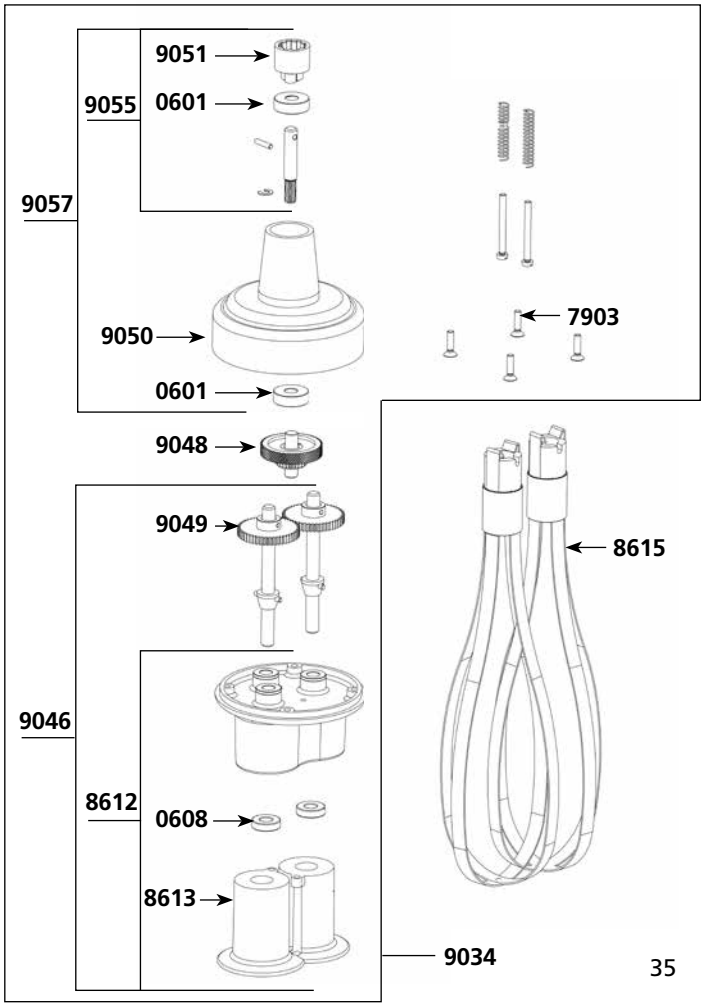

Wall bracket

Parts list	Code	List $ Price
Wall bracket	0880	**99.52**

Tel. 1.800.267.7794
Fax : 1.877.668.6623

www.dynamicmixersusa.com
e-mail : info@dynamicmixers.com

MF 90/2000 & MFAP 90/2000 foot - Ref AC002.H (Complete attachment)

Parts list	Code	List $ Price
Ball bearing	0601	**19.61**
Self-lubricating ring	0603	**4.57**
Waterproof seal	0607	**25.60**
O. ring	0610PD	**4.36**
Tube assembly + bearing	1431	**303.11**
Bell	1432	**285.79**
Cutter blade w/ screw	7917	**51.95**
Coupler for armature	9028	**13.08**
Shaft	9031	**173.64**
Coupling casing + pin	9051	**20.74**
Black tip	9847.M90	**80.82**

PIED BLENDER MASTER - Ref AC070 (Complete attachment)

Parts list	Code	List $ Price
Ball bearing	0601	**19.61**
Seals for bearing assembly (2)	0618	**6.00**
Self-lubricating ring	0666	**18.80**
Waterproof seal	0667	**40.05**
Foot assembly	1401	**296.99**
Blender bell	1402	**139.80**
Cutter blade	1403	**68.67**
Shaft	1404	**188.56**
Blender key	1405	**25.83**
Coupler for armature	9028	**13.08**
Coupling casing + pin	9051	**20.74**
Black tip	9847.M90	**80.82**

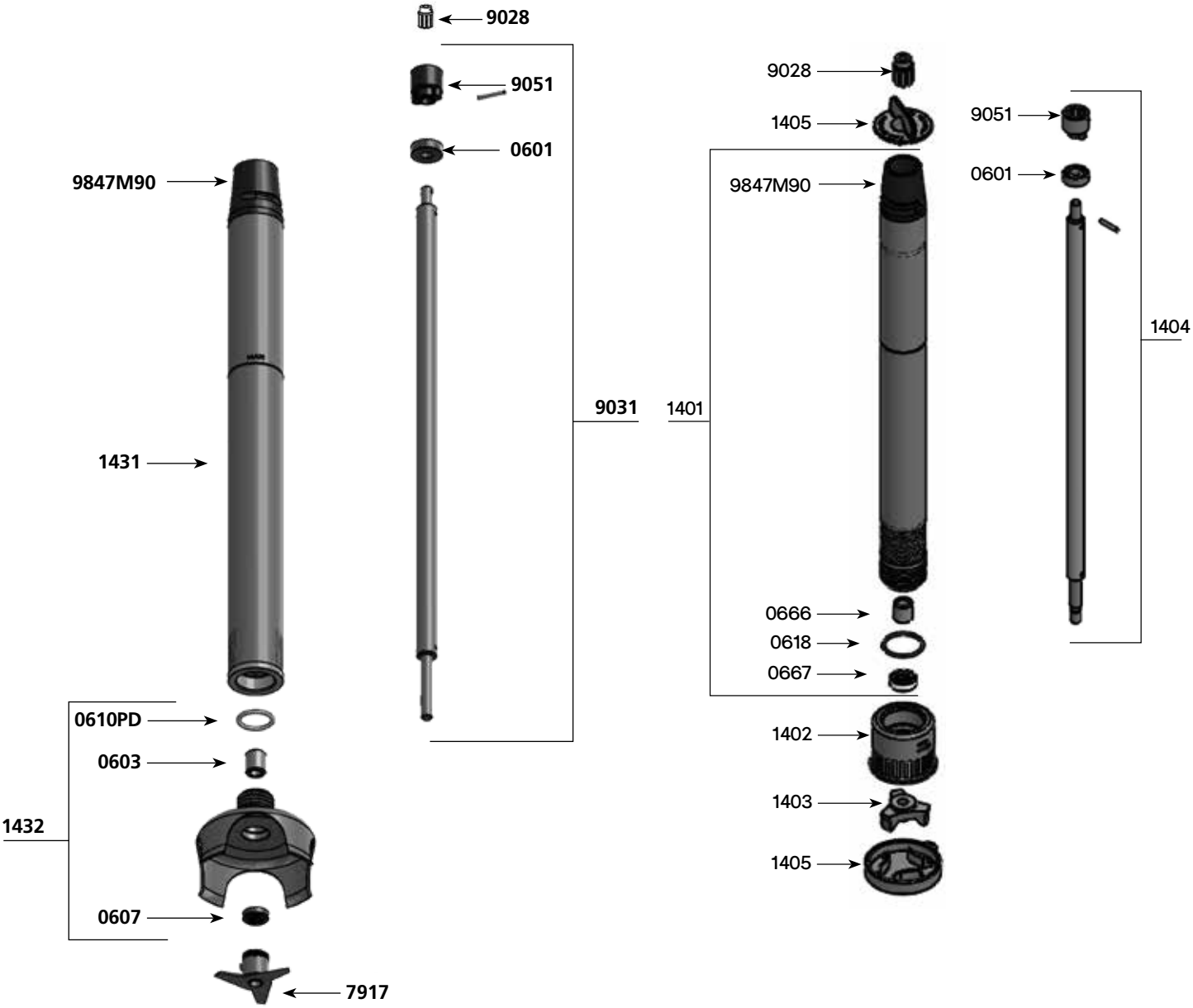

IMPORTANT : *Each spare part order must include the type and the number of the product which appears on the identification plate.*

AP 90 RICER ATTACHMENT

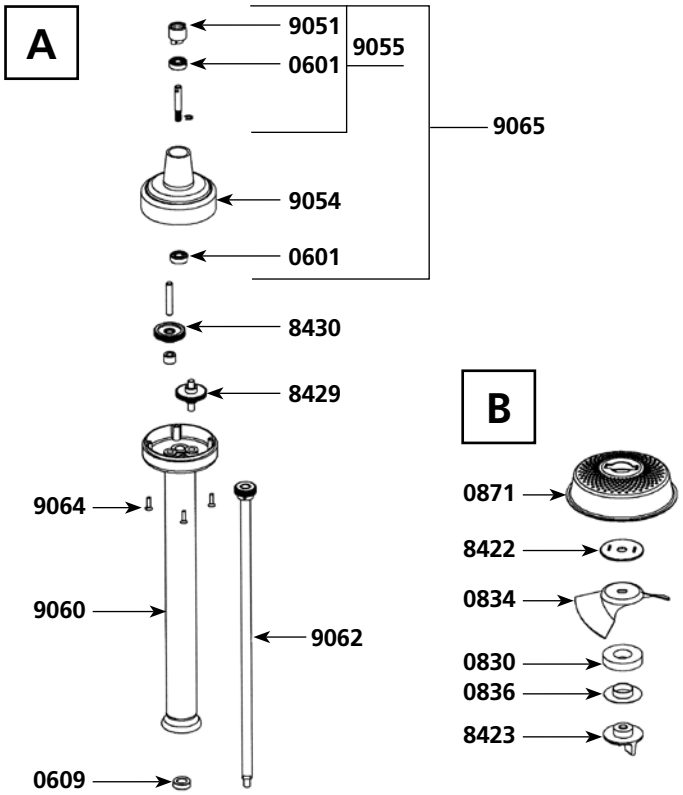

Parts list	Code	List $ Price
Waterproof seal	0609	22.91
Rubber washer	0830	19.41
Blade	0834	131.88
Washer friction	0836	19.90
Grid	0871	163.53
Anti-friction washer	8422	23.22
Lower bolt	8423	44.18
Double gear with washer	8429	165.85
Single gear & shaft	8430	173.64
Coupling casing w/pin	9051	20.74
Reducing casing & seal	9054	116.37
Equipped upper shaft	9055	98.40
Foot assembly	9060	434.95
Main shaft + gear	9062	222.33
Reduction casing screws (4)	9064	5.40
Complete reduction box	9065	153.52

MASTER WHIP FM SERIES

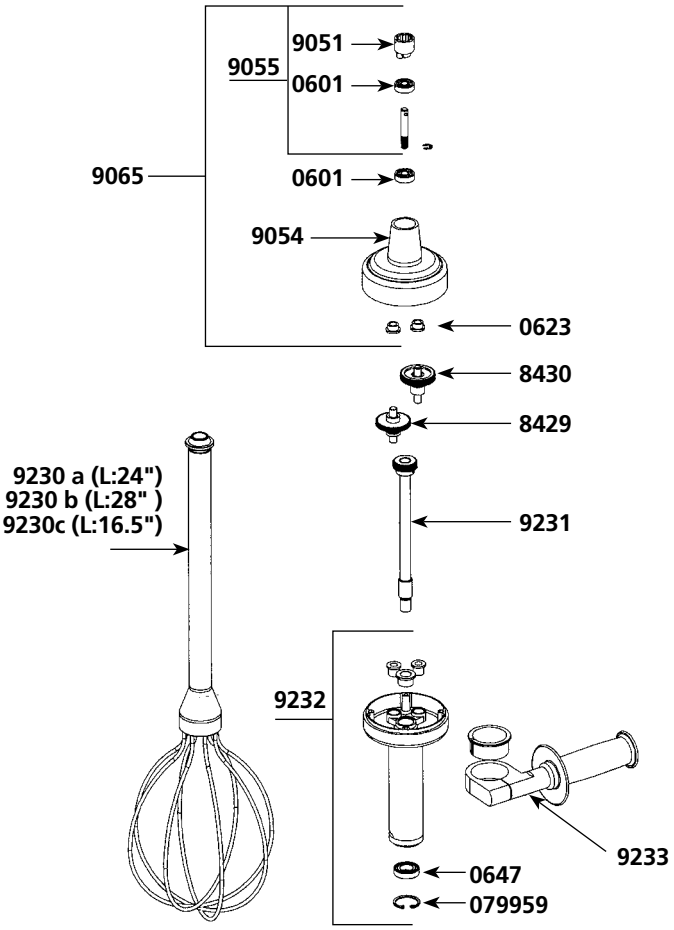

Parts list	Code	List $ Price
Ball bearing	0601	19.61
Bushing (1)	0623	2.63
Bearing	0647	27.06
Circlips	079959	2.78
Double gear with washer	8429	165.85
Middle gear & axle	8430	173.64
Coupling casing w/pin	9051	20.74
Reducing casing+2 seals	9054	116.37
Equipped upper shaft	9055	98.40
Complete reduction box	9065	153.52
Mono whisk / L : 24"	9230 a	654.61
Mono whisk / L : 28"	9230 b	672.66
Mono whisk / L : 16.5"	9230 c	624.78
Main shaft	9231	414.03
Lower carter	9232	244.67
Handle + casing	9233	111.47
Complete reduction box w/ out bowl whisk and handle	9250	800.88

Tel. 1.800.267.7794
Fax : 1.877.668.6623
www.dynamicmixersusa.com
e-mail : info@dynamicmixers.com

Parts list	Code	List $ Price
Sleeve	0415	**46.44**
Motor brushes w/caps (2)	0504	**19.61**
Ball bearing	0601	**19.61**
Waterproof seal	0609	**22.91**
Squeezing washer	0726	**2.75**
Pin 3 x 14	0745	**2.75**
Rubber washing	0830	**19.41**
Fan	0835	**171.63**
Washer friction	0836	**19.90**
Rice grid	0842	**240.28**
Push button switch	0905	**28.85**
Strain relief 230 V	0950	**3.44**
Strain relief 115 V	0950.1	**3.44**
Equipped handle	7901	**62.51**
Spacer screws (4)	7903	**6.37**
Upper carter w/carbon brush holders	7905	**58.56**
Stator 230 V	7908.22	**329.51**
Stator 115 V	7908.21	**329.51**
Rotor 230 V	7908.32	**312.65**
Rotor 115 V	7908.31	**312.65**
Power cord 230 V	7911M	**40.93**
Power cord 115 V	7911M.1	**40.93**
Spacer rods (4)	7913F	**22.12**
Capacitor	7931	**17.39**
Fan	7933	**12.50**
Handle cap w/screws	7938	**25.45**
Identification plate 230 V	8404	**60.96**
Identification plate 115 V	8404.1	**60.96**
Motor 230 V	8408	**524.10**
Motor 115 V	8408.1	**524.10**
Foot assembly	8419	**498.67**
Antifriction washer	8422	**23.22**
Lower bolt	8423	**44.18**
Output shaft w/ gear	8428	**210.08**
Double gear with washer	8429	**165.85**
Middle gear & axle	8430	**173.64**
Plate w/ 2 seals	8431	**42.11**

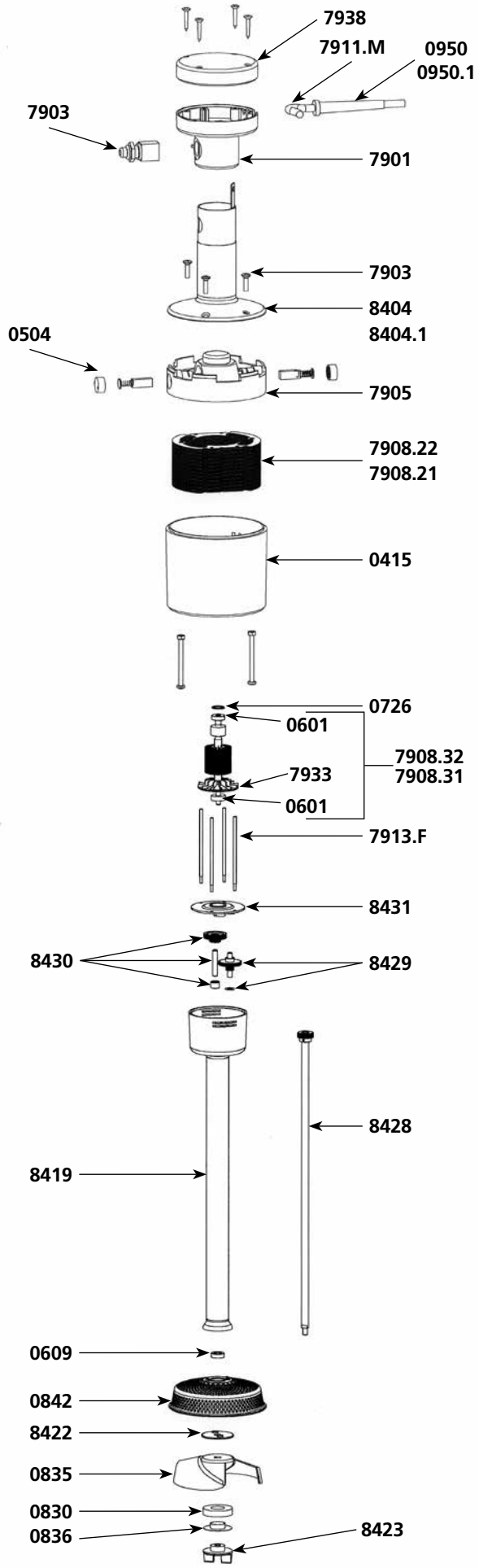

IMPORTANT : *Each spare part order must include the type and the number of the product which appears on the identification plate.*

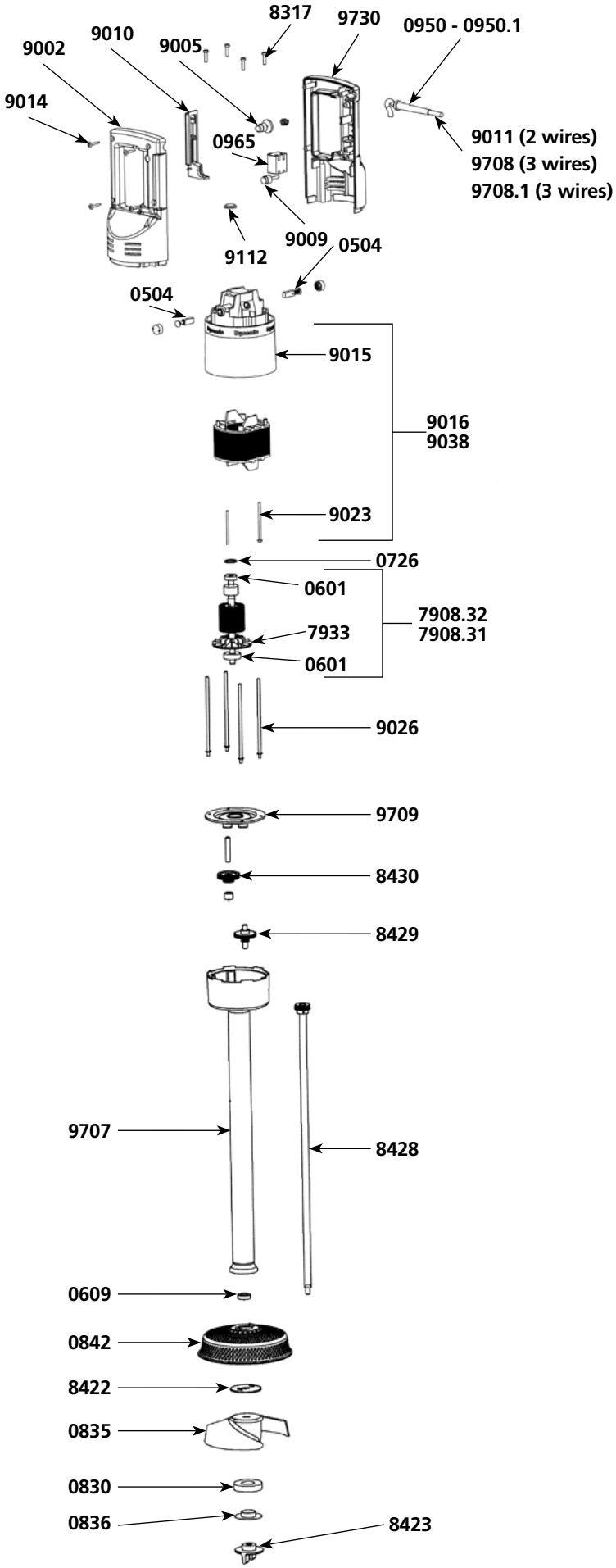

Parts list	Code	List $ Price
Motor brushes (2)	0504	**19.61**
Ball bearing	0601	**19.61**
Waterproof seal	0609	**22.91**
Squeezing washer	0726	**2.75**
Pin 3 x 14	0745	**2.75**
Safety button return spring	0768	**5.42**
Rubber washing	0830	**19.41**
Fan	0835	**171.63**
Washer friction	0836	**19.90**
Ricer grid	0842	**240.28**
Wall bracket	0881	**11.45**
Strain relief 230V	0950	**3.44**
Strain relief 115 V	0950.1	**3.44**
Switch 230 V	0964	**52.09**
Switch 115 V	0965	**52.09**
Capacitor	0972	**19.41**
Capacitor + filter	0972.1	**22.58**
Dynamic label	1027	**17.11**
ID label 230 V	1056	**7.17**
ID label 115 V	1057	**7.17**
Rotor 115 V	7908.31	**312.65**
Rotor 230 V	7908.32	**312.65**
Fan	7933	**12.50**
Spacer screws (4)	8317	**6.37**
Antifriction washer	8422	**23.22**
Lower bolt	8423	**44.18**
Output shaft w/ gear	8428	**210.08**
Double gear with washer (from N°050025)	8429	**165.85**
Middle gear & axle	8430	**173.64**
Upper half handle	9002	**76.75**
Rubber button cap	9005	**4.17**
Plug	9009	**4.17**
Control lever	9010	**18.01**
Power cord 2 cond. 230 V (from N°050025)	9011	**30.44**
Handle screws (4)	9014	**0.91**
Motor housing w/carbon brush holders	9015	**103.93**
Stator 230 V w/carter carbon brush holders	9016	**277.90**
Stator screws (2)	9023	**5.18**
Spacer rods (4)	9026	**22.12**
Stator 115 V w/carbon brush holders	9038	**277.90**
Power cord 115 V w/carbon brush holders (from N°050025)	9040	**38.09**
Carbon brush wires 230 V	9043	**13.08**
Power cord (Australian) (from N°050025)	9066	**76.35**
Power cord (UK) (from N°050025)	9067	**69.47**
Speed control plug	9112	**2.81**
Carbon brush wires 115 V	9143	**13.08**
Complete handle 230 V	9700	**221.83**
Complete handle 115 V	9700.1	**221.83**
Complete foot assembly	9707	**541.90**
Power cord + Label 230 V (from N°050025) 3 wires	9708	**41.20**
Power cord + Label 115 V (from N°050025) 3 wires	9708.1	**41.20**
Plate w/ 2 seals	9709	**43.85**
Lower half handle (label side) 230 V	9730	**78.69**
Lower Half handle (label side) 115 V	9740	**78.69**

Tel. 1.800.267.7794
Fax : 1.877.668.6623

www.dynamicmixersusa.com
e-mail : info@dynamicmixers.com

Parts list	Code	List $ Price
Motor brushes	0504	**19.61**
Ball bearing	0601	**19.61**
Rubber washer	0726	**2.75**
Safety button return spring	0768	**5.42**
Strain relief 230 V	0950	**3.44**
Strain relief 115 V	0950.1	**3.44**
Switch	0965	**52.09**
Capacitor (115 V)	0972	**19.41**
Capacitor + filter	0972.1	**22.58**
Dynamic label	1027	**17.11**
Identification plate 230 V	109913	**7.39**
Identification plate 115 V	109914	**7.39**
Rotor 230 V	7908.31	**312.65**
Rotor 115 V	7908.32	**312.65**
Fan	7933	**12.50**
Spacer screws	8317	**6.37**
Upper half handle	9002	**76.75**
Security cap	9005	**4.17**
Handle cap	9009	**4.17**
Control lever	9010	**18.01**
Variable speed knob	9012	**5.57**
Variable speed control board 230 V	9013	**131.99**
Handle screw	9014	**0.91**
Top housing	9015	**103.93**
Stator 230 V	9016	**277.90**
Stator screws 230 V (2)	9023	**5.18**
Stator 115 V	9038	**277.90**
Power cord 115 V	9040	**38.09**
Carbon brush wires (230 V)	9043	**13.08**
Variable speed control board 115 V	9053	**131.99**
Variator cap	9112	**2.81**
Carbon brush wires 115 V (2)	9143	**13.08**
Lower half handle 230 V (with label)	9730	**78.69**
Lower half handle 115 V (with label)	9740	**78.69**
Lower motor housing	9761	**691.47**
Complete handle w/power cord 230 V	9765	**222.34**
Complete handle w/power cord 115 V	9765.1	**222.34**

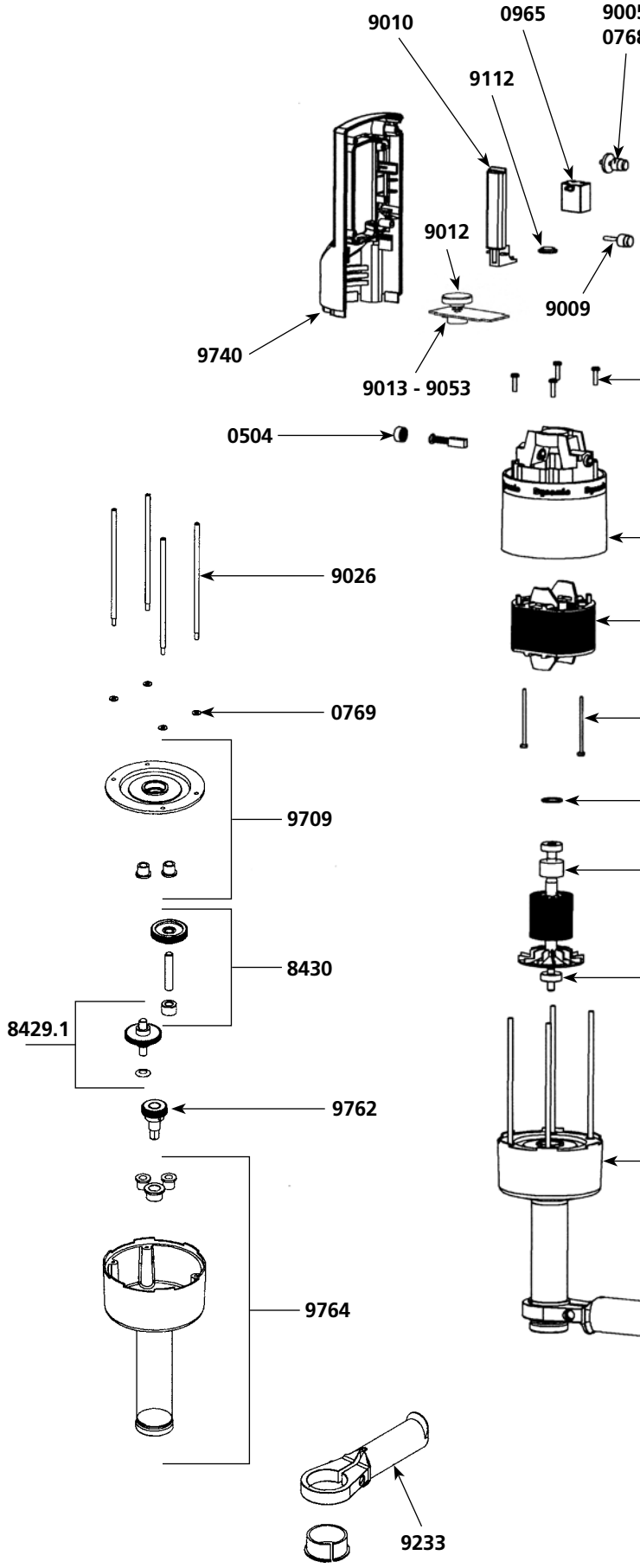

Equipped lower carter PP97 plus

Parts list	Code	List $ Price
M4 Washer	0769	**2.06**
Double gear with washer	8429.1	**165.85**
Middle gear axle	8430	**173.64**
Spacer rods	9026	**22.12**
Handle support	9233	**111.47**
Plate w/ 2 seals	9709	**43.85**
Exit shaft w/gear	9762	**169.25**
Aluminium carter. foot and seals	9764	**226.93**

IMPORTANT : *Each spare part order must include the type and the number of the product which appears on the identification plate.*

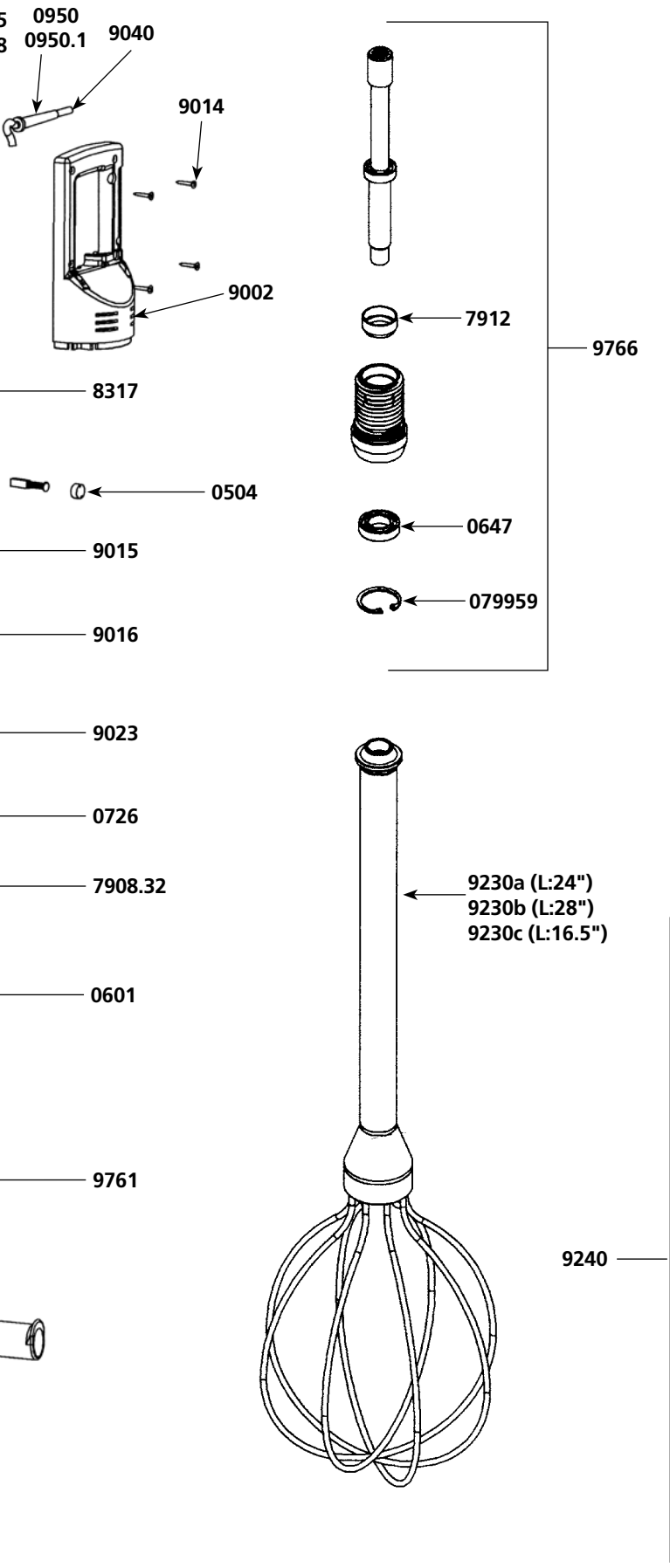

Whip tool for PP97 plus - FM97

Parts list	Code	List $ Price
D15 Bearing	0647	**27.06**
Rubber ring	079959	**2.78**
Ball bearing	7912	**5.18**
Mono whisk L : 24"	9230a	**654.61**
Mono whisk L : 28"	9230b	**672.66**
Mono whisk L : 16.5"	9230c	**624.78**
Equipped male casing (shaft. bearing seal. ball bearing. rubber ring)	9766	**222.34**

AP 97 for Ricer tool

Parts list	Code	List $ Price
Waterproof seal	0609	**22.91**
Toric seal	0641	**4.06**
Rubber washing	0830	**19.41**
Fan	0835	**171.63**
Friction washer	0836	**19.90**
Ricer grid	0842	**240.28**
Bearing seal	7912	**5.18**
Antifriction seal	8422	**23.22**
Lower bolt	8423	**44.18**
Equipped male casing. bearing seal. tube and complete lever assembly	9240	**265.53**
Exit shaft	9241	**294.64**

Tel. 1.800.267.7794
Fax : 1.877.668.6623
www.dynamicmixersusa.com
e-mail : info@dynamicmixers.com

Parts list	Code	List $ Price
Fan	0509	**13.38**
Motor brushes (pair)	0529	**22.04**
Ball bearing	0601	**19.61**
Motor ball bearing	0602	**22.78**
Rubber ring	0760	**4.38**
Clips	0776	**1.66**
Washer & bolt for fan	0777	**1.66**
Wall bracket	0862	**28.71**
Rocking switch	0903	**24.08**
Capacitor	0909	**17.39**
Strain relief 230 V	0950	**3.44**
Strain relief 115 V	0950.1	**3.44**
Push button switch	0990	**128.75**
ON/OFF label	1008	**3.52**
Foot assembly (tube. bearing. assembly)	45110	**535.10**
Shaft & ball bearing	45120	**208.93**
Coupling sleeves	45122	**33.34**
Motor & shaft drive sprocket	45123	**31.02**
Fan housing (no motor brushes)	45125	**192.35**
Lower bearing assembly	45130	**49.72**
Brush holder w/ cap (1) 230 V	45131	**93.23**
Brush holder w/ cap (1) 115 V	45131.1	**93.23**
Lower motor casing	45132	**101.10**
Upper motor casing	45133	**101.10**
Stator 230 V	45135	**528.59**
Stator 115 V	45135.1	**528.59**
Rotor 230 V	45136	**528.59**
Rotor 115 V	45136.1	**528.59**
Stator screws (2)	45137	**3.82**
Spacer rods (4)	45138	**22.94**
Spacer screws (4)	45139	**3.98**
ID plate	45144	**18.81**
Cutter blade w/screw	45161	**57.26**
Motor 115 V	45200.1	**821.45**
Motor 230 V	45200.2	**821.45**

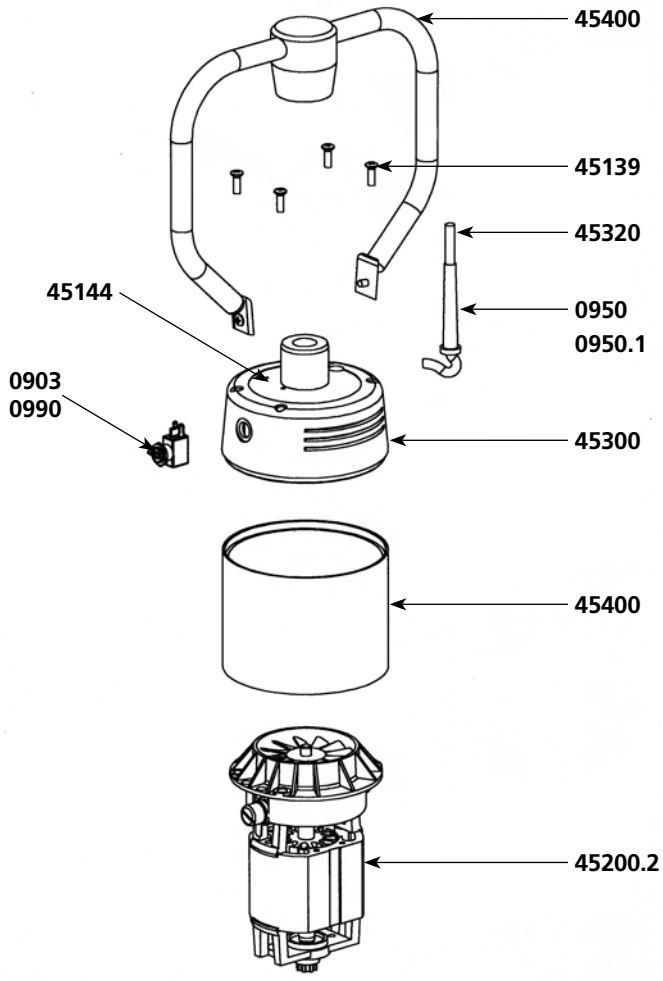

IMPORTANT : *Each spare part order must include the type and the number of the product which appears on the identification plate.*

Parts list	Code	List $ Price
Squeezing washer (4)	45230	**8.47**
Upper carter 230 V	45300	**329.99**
Upper carter 115 V	45300.1	**329.99**
Power cord 230 V	45320	**48.69**
Power cord 115 V	45320.1	**48.69**
Complete handle	45400	**296.67**
Sleeve	45500	**104.21**
Kit w/ shaft, lower bearing, coupler, cutter	45533	**315.93**
Conversion kit (SMX450 to SMX500)	45600	**443.70**
Perforated disc	45810	**82.94**
Perforated disc w/ pin	45820	**82.94**
Bearing screws for aluminium bell (3)	7950	**1.72**
Lower bearing screws (3)	9902	**1.72**

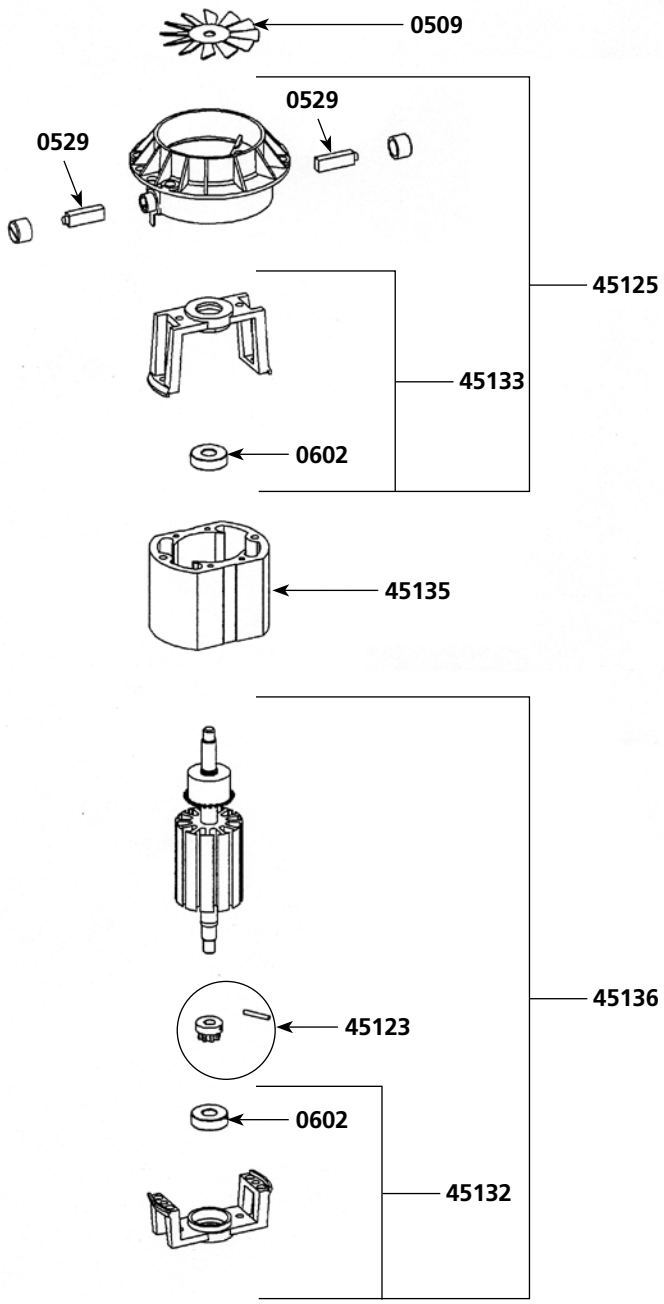

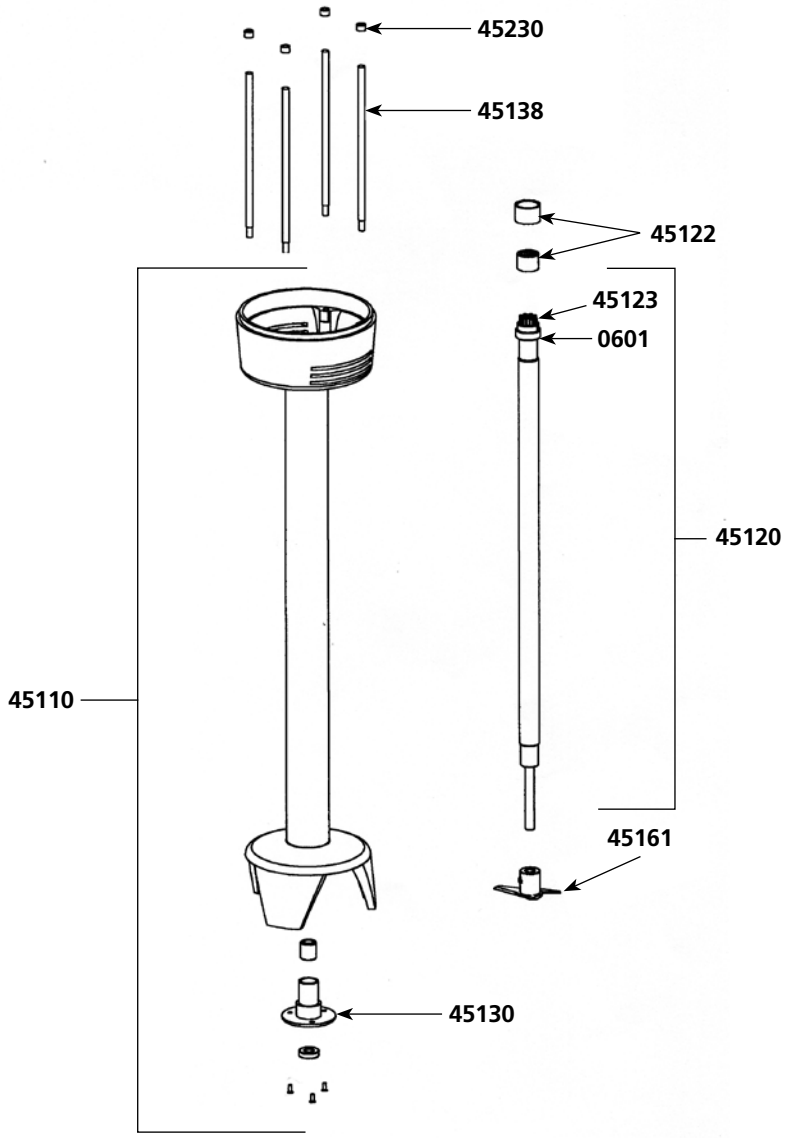

Tel. 1.800.267.7794
Fax : 1.877.668.6623

www.dynamicmixersusa.com
e-mail : info@dynamicmixers.com

Parts list	Code	List $ Price
Turbine	0509	**13.38**
Motor brushes (pair)	0529	**22.04**
Ball bearing	0601	**19.61**
Motor ball bearing	0602	**22.78**
Waterproof seal	0607	**25.60**
Spring	0760	**4.38**
Clips	0776	**1.66**
Washer & bolt for fan	0777	**1.66**
Wall bracket	0862	**28.71**
Locking switch	0907	**41.06**
Non-locking switch	0908	**41.06**
Capacitor	0909	**17.39**
Strain relief 230 V	0950	**3.44**
Strain relief 115 V	0950.1	**3.44**
Lower bearing assembly support	1185	**31.58**
Shaft & ball bearing	45120	**208.93**
Coupling sleeves	45122	**33.34**
Motor & shaft drive sprocket	45123	**31.02**
Fan housing	45125	**192.35**
Lower bearing assembly	45130	**49.72**
Brush holder w/ cap (1)	45131	**93.23**
Brush holder w/ cap (1)	45131.1	**93.23**
Lower motor casing	45132	**101.10**
Upper motor casing	45133	**101.10**
Stator 230 V	45135	**528.59**
Stator 115 V	45135.1	**528.59**
Rotor 230 V	45136	**528.59**
Rotor 115 V	45136.1	**528.59**
Stator screws(2)	45137	**3.82**
Spacer rods (4)	45138	**22.94**
Spacer screws (4)	45139	**3.98**
Cutter blade w/screw	45161	**57.26**

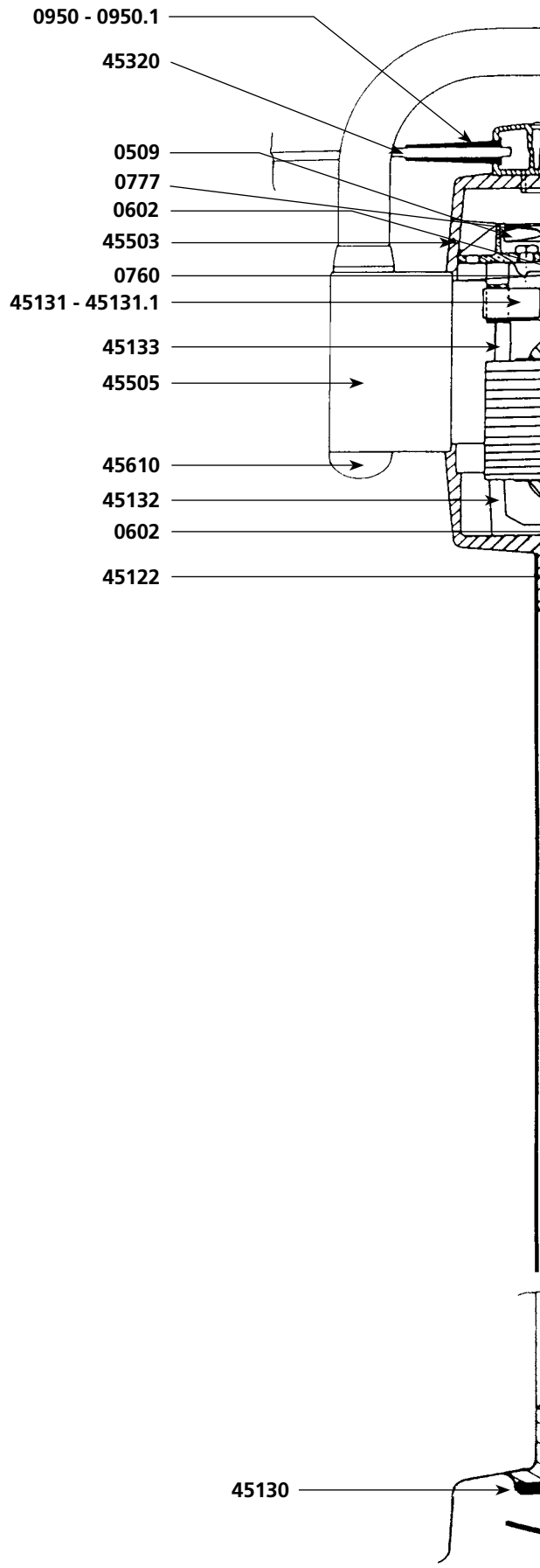

IMPORTANT : *Each spare part order must include the type and the number of the product which appears on the identification plate.*

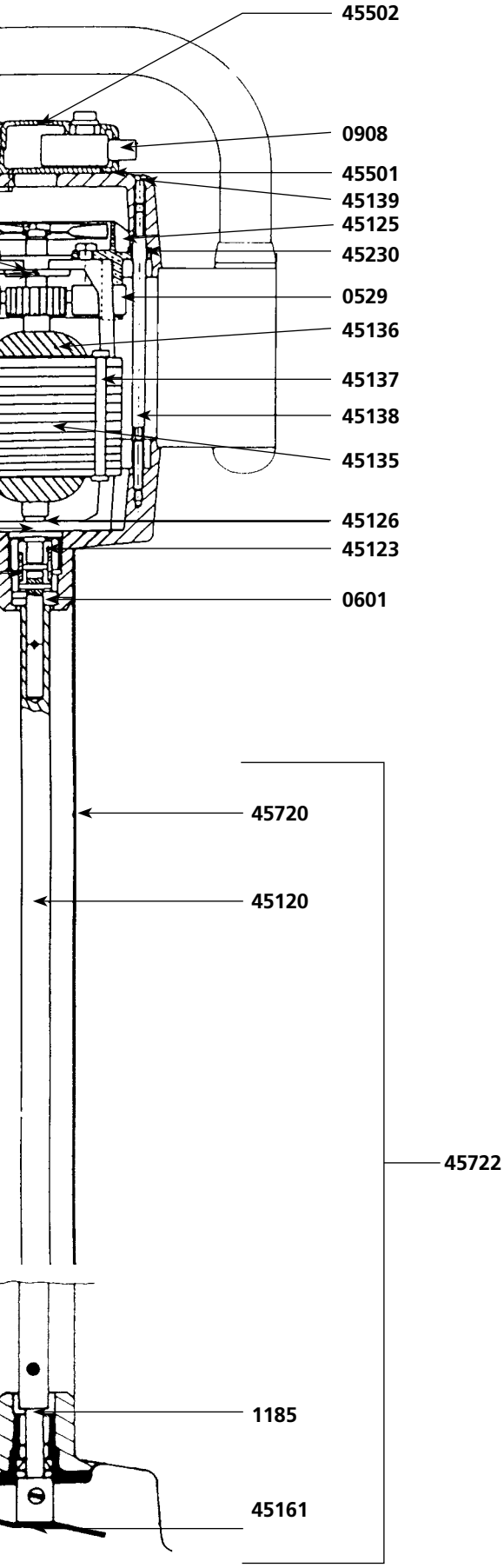

Parts list	Code	List $ Price
Double isolation part	45126	**22.18**
Motor 115 V	45200.1	**821.45**
Motor 230 V	45200.2	**821.45**
Squeezing washers (4)	45230	**8.47**
Power cord 230 V	45320	**48.69**
Power cord 115 V	45320.1	**48.69**
Lower housing (orange plastic piece)	45501	**25.20**
Upper housing (orange plastic piece)	45502	**27.41**
Top housing	45503	**306.31**
Sleeve & complete handle	45505	**175.55**
Complete housing w/ screws	45510	**48.69**
Kit w/ shaft. lower bearing. cutter	45533	**315.93**
Handle cap (2)	45610	**8.34**
Foot assembly	45720	**535.10**
Complete foot assembly	45722	**803.08**
Perforated disc	45810	**82.94**
Perforated disc w/ pin	45820	**82.94**
Lower bearing screws for aluminium bell (3)	7950	**1.72**
Lower bearing screws (3)	9902	**1.72**

Tel. 1.800.267.7794
Fax : 1.877.668.6623

www.dynamicmixersusa.com
e-mail : info@dynamicmixers.com

Parts list	Code	List $ Price
Fan	0509	**13.38**
Motor brushes (pair)	0529	**22.04**
Ball bearing	0601	**19.61**
Motor ball bearing	0602	**22.78**
Self-lubricating ring	0603	**4.57**
Waterproof seal	0607	**25.60**
O. ring	0610	**2.75**
Rubber washer	0760	**4.38**
Clips	0776	**1.66**
Washer & bolt for fan	0777	**1.66**
Wall bracket	0862	**28.71**
Locking switch	0907	**41.06**
Non-locking switch	0908	**41.06**
Capacitor	0909	**17.39**
Strain relief 115 V	0950.1	**3.44**
ID label 115 V	1049	**19.31**
Lower bearing assembly support	1185	**31.58**
Lower bearing screws for aluminium bell (3)	7950	**1.72**
Power cord 115 V	9040	**38.09**
Bearing support screws (3)	9902	**1.72**
Stainless steel lower bearing screws (3)	9902.1	**1.90**
Shaft & ball bearing	45120	**208.93**
Coupling sleeves	45122	**33.34**
Motor & shaft drive sprocket	45123	**31.02**
Fan housing	45125	**192.35**
Double isolation part	45126	**22.18**
Lower bearing assembly	45130	**49.72**
Complete stainless steel lower bearing	45130.1	**92.27**
Lower motor casing	45132	**101.10**
Upper motor casing	45133	**101.10**

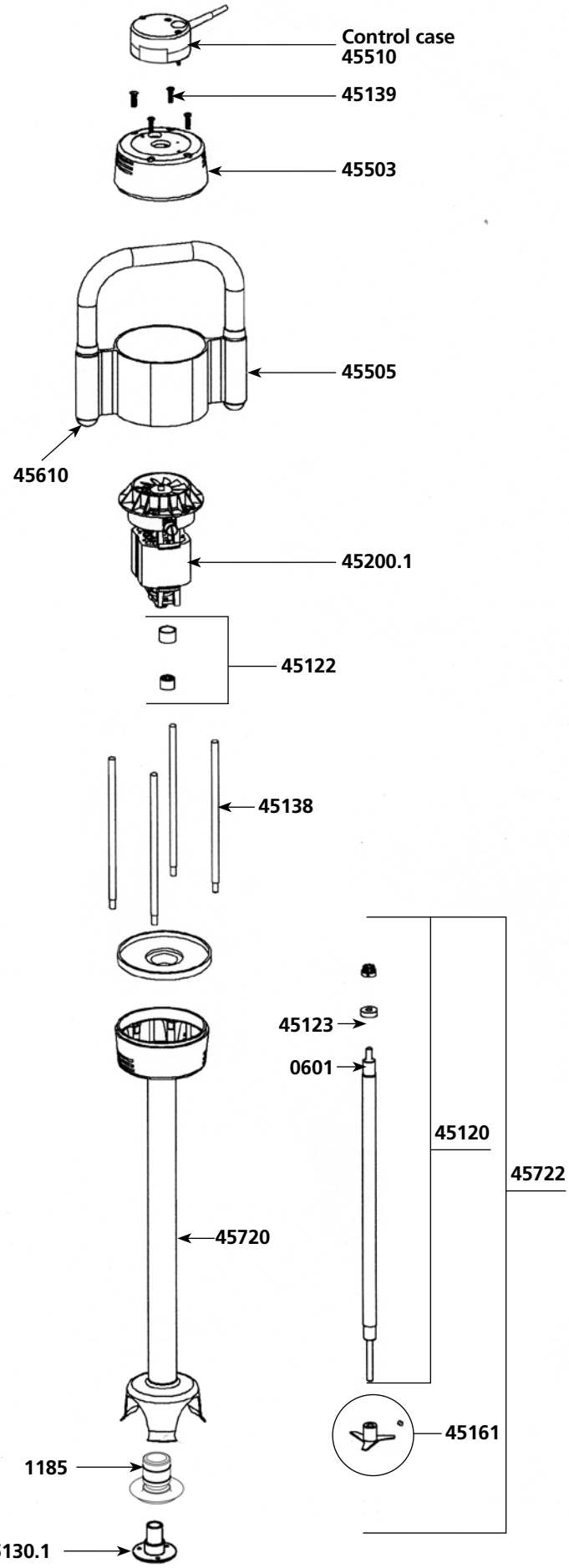

IMPORTANT : *Each spare part order must include the type and the number of the product which appears on the identification plate.*

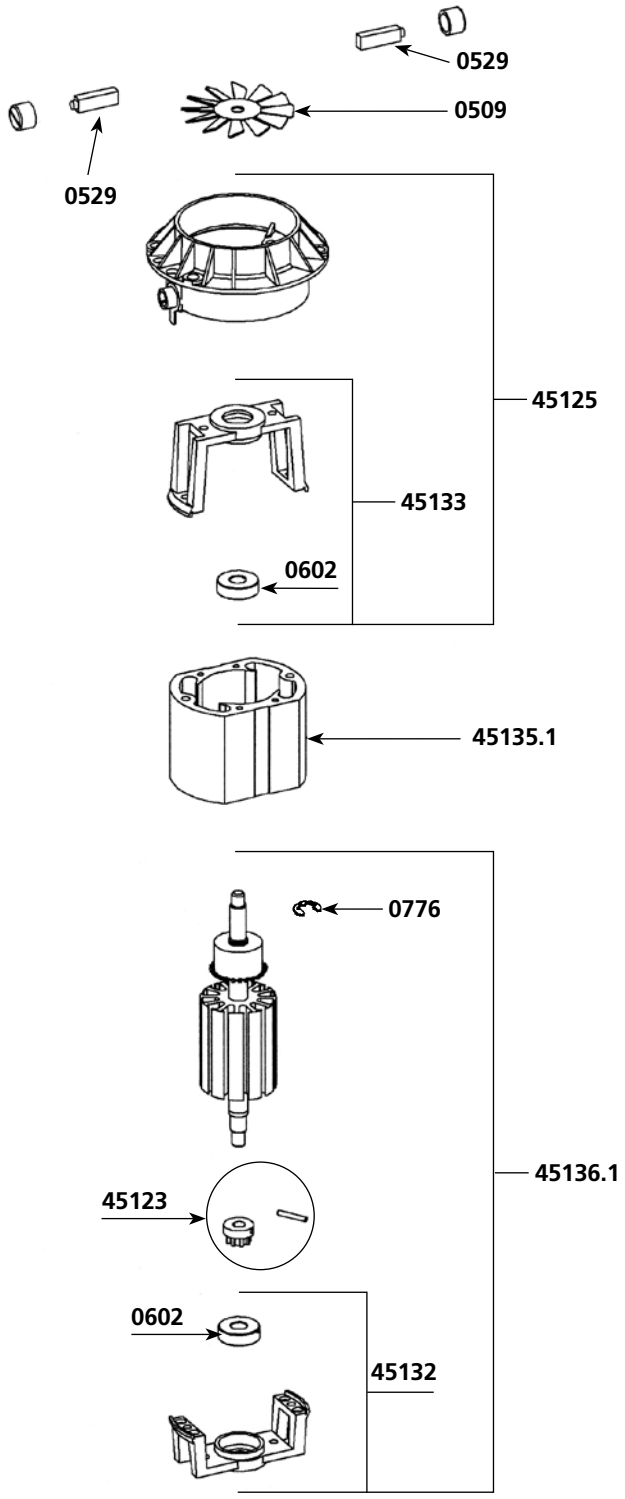

Parts list	Code	List $ Price
Stator 230 V	45135	**528.59**
Stator 115 V	45135.1	**528.59**
Rotor 230 V	45136	**528.59**
Rotor 115 V	45136.1	**528.59**
Stator screws (2)	45137	**3.82**
Spacer rods (4)	45138	**22.94**
Spacer screws (4)	45139	**3.98**
Cutter blade w/ screw	45161	**57.26**
Motor 115 V	45200.1	**821.45**
Motor 230 V	45200.2	**821.45**
Squeezing washer (4)	45230	**8.47**
Lower housing (orange plastic piece)	45501	**25.20**
Upper housing (orange plastic piece)	45502	**27.41**
Top housing	45503	**306.31**
Sleeve & complete handle	45505	**175.55**
Complete housing w/ screws	45510	**48.69**
Kit w/ shaft. lower bearing. coupler. cutter	45533	**315.93**
Handle cap (2)	45610	**8.34**
Circuit Board 115 V	45620.1	**180.63**
Foot assembly	45720.1	**535.10**
Locking kit	45721	**428.00**
Complete foot assembly	45722	**803.08**
Perforated disc	45810	**82.94**
Perforated disc w/ pin	45820	**82.94**

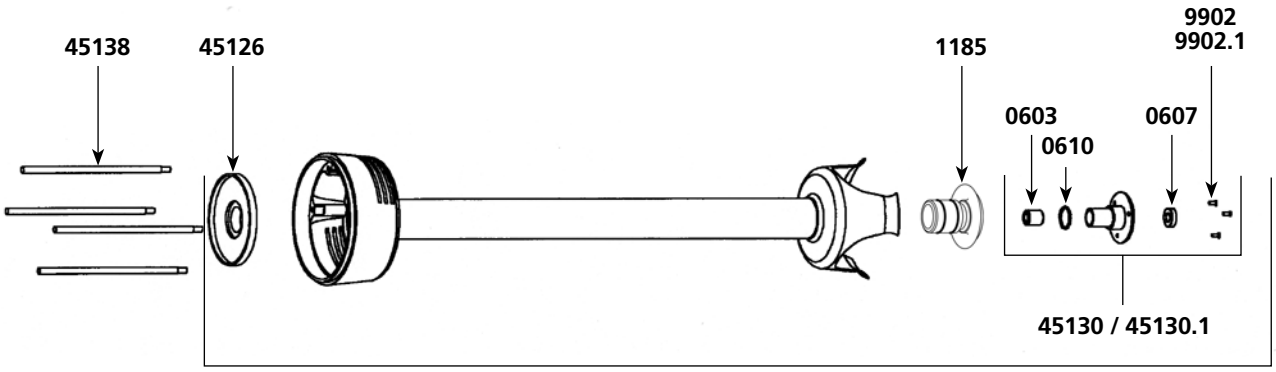

45720.1

Tel. 1.800.267.7794
Fax : 1.877.668.6623
www.dynamicmixersusa.com
e-mail : info@dynamicmixers.com

Parts list	Code	List $ Price
Aluminium Fan	0509	**13.38**
Motor brushes (pair)	0529	**22.04**
Ball bearing	0601	**19.61**
Motor ball bearing	0602	**22.78**
Self-lubricating ring	0603	**4.57**
Waterproof seal	0607	**25.60**
O. ring	0610	**2.75**
Rubber washer	0760	**4.38**
Clips	0776	**1.66**
Washer & bolt for fan	0777	**1.66**
Wall bracket	0862	**28.71**
Strain relief 115 V	0950.1	**3.44**
ID label 115 V	1009	**19.31**
Lower bearing assembly support	1185	**31.58**
Shaft. ball bearing + sprocket	45120	**208.93**
Coupling sleeves	45122	**33.34**
Motor & shaft drive sprocket	45123	**31.02**
Fan housing Plastic	45125.P	**192.35**
Double isolation part	45126	**22.18**
Lower ball bearing assembly	45130	**49.72**
Complete stainless steel lower bearing	45130.1	**92.27**
Brush Holder w/cap (1)	45131	**93.23**
Lower motor casing	45132	**101.10**
Upper motor casing	45133	**101.10**
Stator 115 V	45135.1	**528.59**
Rotor 115 V	45136.1	**528.59**
Stator screws (2)	45137	**3.82**

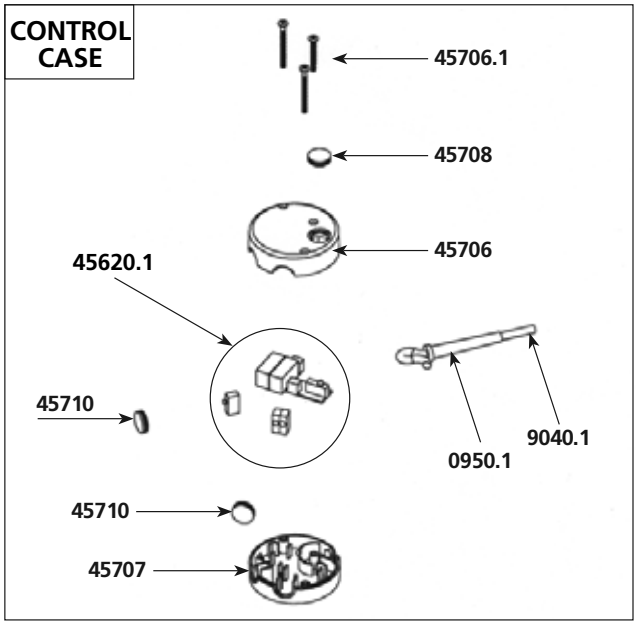

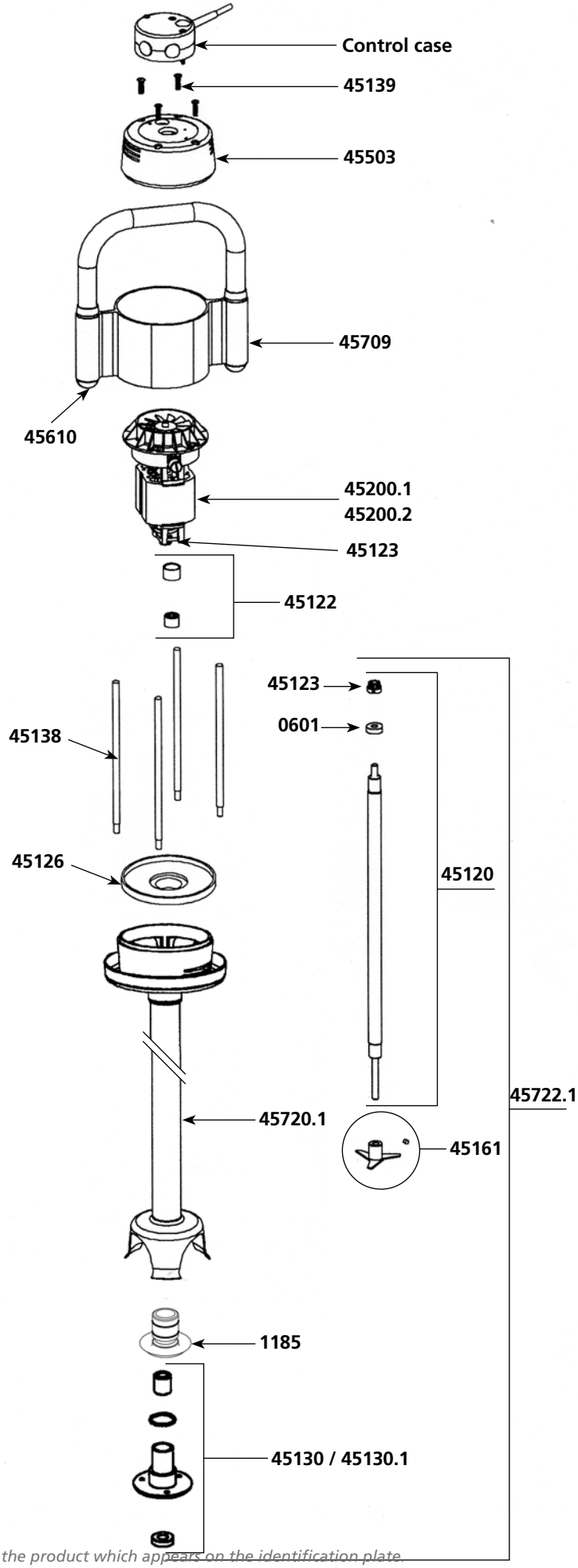

IMPORTANT : *Each spare part order must include the type and the number of the product which appears on the identification plate.*

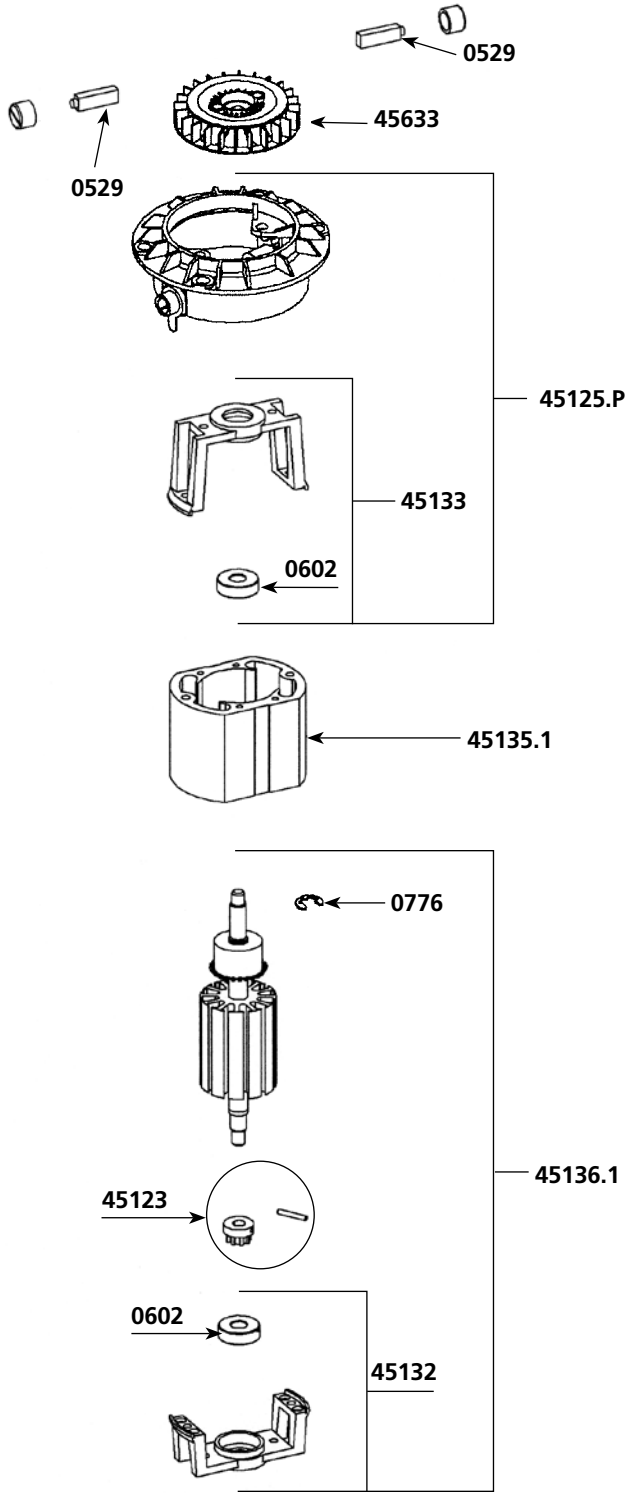

Parts list	Code	List $ Price
Spacer rods (4)	45138	**22.94**
Spacer screws (4)	45139	**3.98**
Cutter blade w/screw	45161	**57.26**
Motor 115 V	45200.1	**821.45**
Motor 230 V	45200.2	**821.45**
Squeezing washers (4)	45230	**8.47**
Top housing	45503	**306.31**
Kit w/ shaft. lower bearing. coupler. cutter	45533	**315.93**
Handle cap (2)	45610	**8.34**
Circuit board 115V	45620.1	**180.63**
Plastic Fan	45633	**24.61**
Top housing (orange plastic piece)	45706	**27.41**
Screws control case set	45706.1	**2.89**
Lower housing (orange plastic piece)	45707	**25.20**
Handle cap protector (unit)	45708	**4.47**
Sleeve & complete handle & label & cap	45709	**175.55**
Handle cap protectors (unit)	45710	**4.26**
Orange housing w/ screws	45711	**48.69**
Foot assembly w/ lower bearing	45720.1	**535.10**
Complete foot assembly	45722.1	**803.08**
Power cord 115 V	9040.1	**49.34**
Bearing support screws (3)	9902	**1.72**
Stainless steel lower bearing screws (3)	9902.1	**1.90**

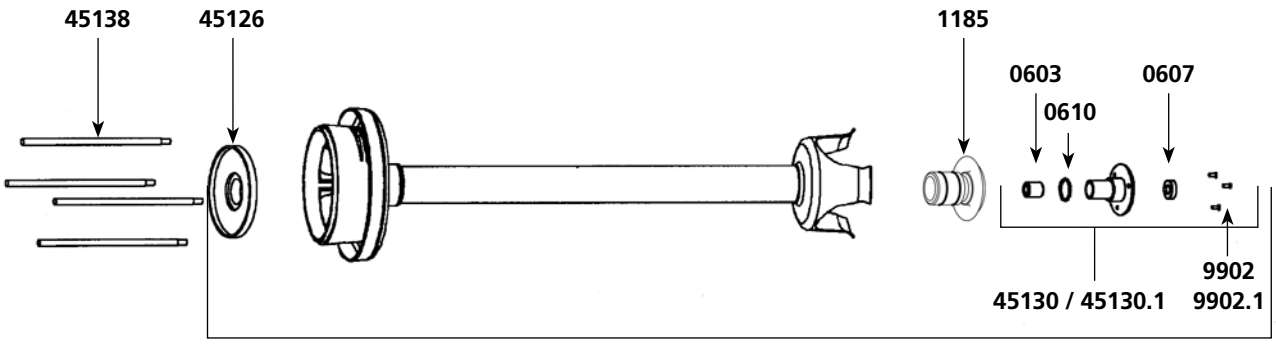

Tel. 1.800.267.7794
Fax : 1.877.668.6623
www.dynamicmixersusa.com
e-mail : info@dynamicmixers.com

Parts list	Code	List $ Price
Ball bearing	0601	**19.61**
Wall bracket	0862	**28.71**
Strain relief 115 V	0950.1	**3.44**
Shaft & ball bearing	45120 H	**222.79**
Coupling sleeves	45122	**33.34**
Motor & shaft drive sprocket	45123	**31.02**
Removable complete bell	45130 H	**494.59**
Spacer rods (4)	45138 H	**24.40**
Spacer screws (4)	45139	**3.98**
Cutter blade w/ screw	45161	**57.26**
Motor 230 V	45200H	**875.95**
Motor 115 V	45200H.1	**875.95**
Squeezing washer (4)	45230	**8.47**
Top housing	45503	**306.31**
Handle cap (2)	45610H	**8.87**
Circuit board 115 V	45620.1	**180.63**
Top housing (orange plastic piece)	45706	**27.41**
Screws control case set	45706.1	**2.89**
Lower housing (orange platic piece)	45707	**25.20**
Handle cap protector (unit)	45708	**4.47**
Sleeve & complete handle & label & cap	45709H	**184.24**
Handle cap protector (unit)	45710	**4.26**
Complete control casing 115 V	45712.1	**293.10**
Foot assembly w / lower brearing	45720H	**570.65**
Complete foot assembly	45722H	**854.49**
Power cord 115 V	9040.1	**49.34**

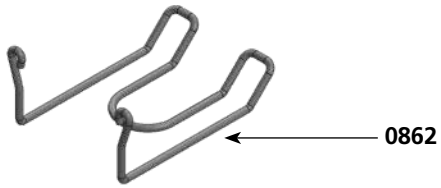

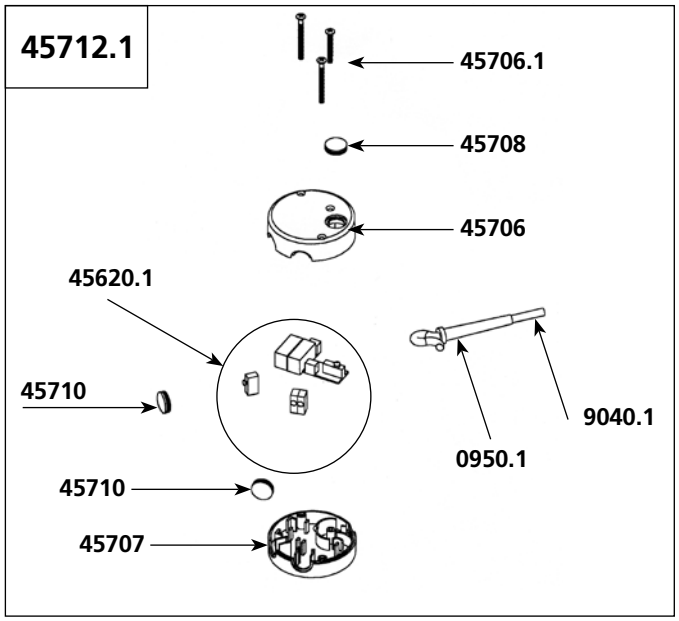

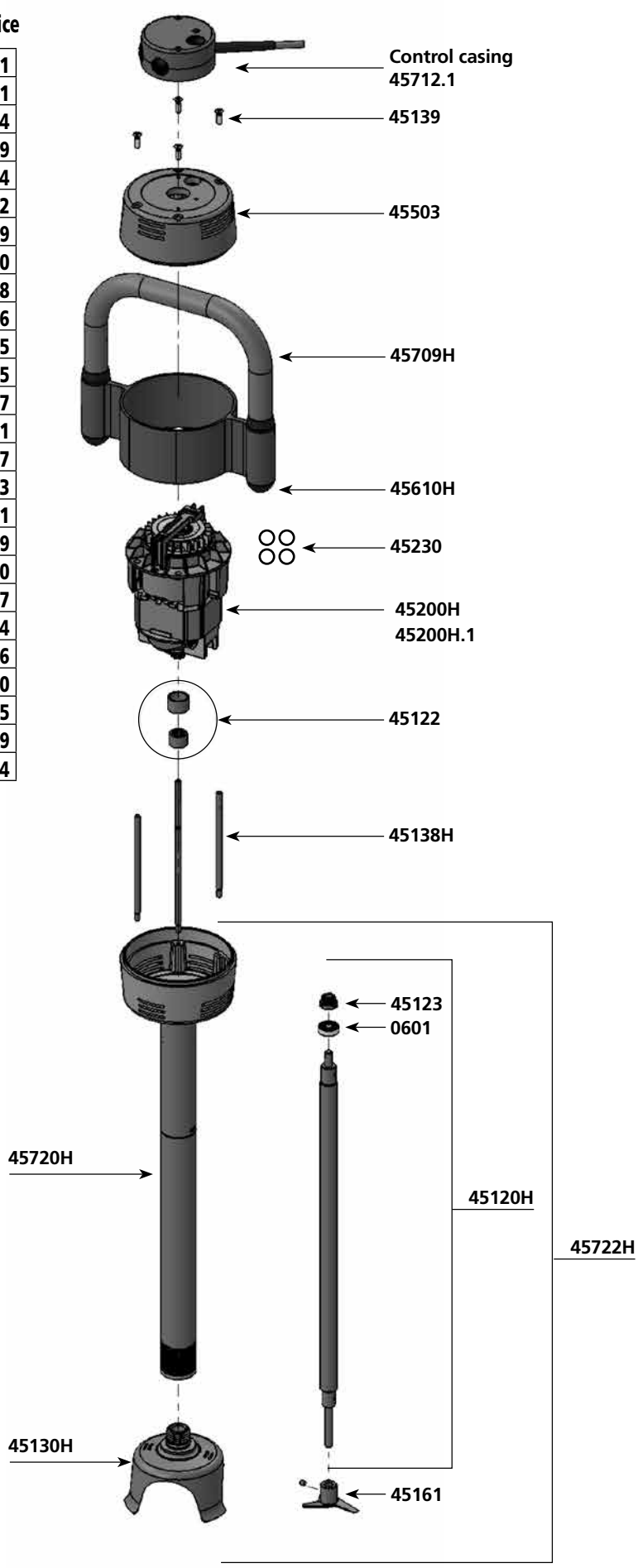

IMPORTANT : *Each spare part order must include the type and the number of the product which appears on the identification plate.*

45200H
45200H.1

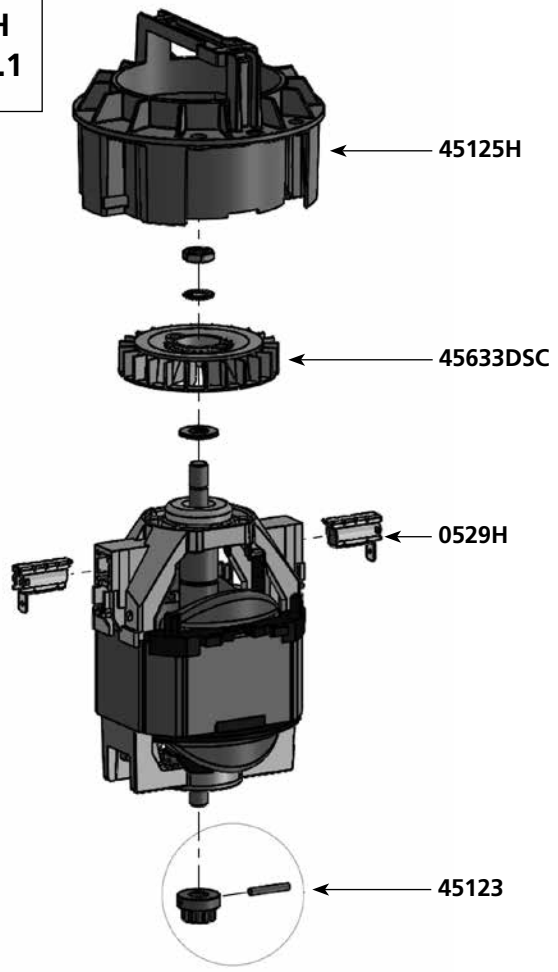

Parts list	Code	List $ Price
Brushes (2)	0529H	**23.47**
Motor & shaft drive sprocket	45123	**31.02**
Fan housing Plastic	45125H	**205.16**
Plastic Fan	45633DSC	**23.66**

45130 H

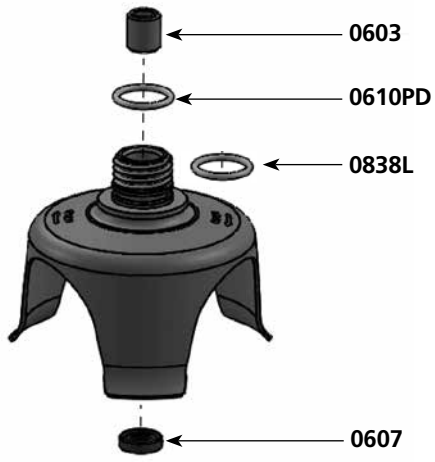

Parts list	Code	List $ Price
Self-lubricating ring	0603	**4.57**
Waterproof seal	0607	**25.60**
O. ring	0610PD	**4.36**
Friction washer	0838L	**7.25**

Tel. 1.800.267.7794
Fax : 1.877.668.6623
www.dynamicmixersusa.com
e-mail : info@dynamicmixers.com

SMX 600 DSC - 115 V

Parts list	Code	List $ Price
Motor brushes (pair)	0529	**22.04**
Ball bearing	0601	**19.61**
Motor ball bearing	0602	**22.78**
Self-lubricating ring	0603	**4.57**
Waterproof seal	0607	**25.60**
O. ring	0610	**2.75**
Rubber washer	0760	**4.38**
Clips	0776	**1.66**
Washer & bolt for fan	0777	**1.66**
Wall bracket	0862	**28.71**
Strain relief 115 V	0950.1	**3.44**
ID label 115 V	1009	**19.31**
Lower bearing assembly support	1185	**31.58**
Shaft & ball bearing	45120	**208.93**
Coupling sleeves	45122	**33.34**
Motor + drive sprocket	45123	**31.02**
Fan housing Plastic	45125.P	**192.35**
Double isolation plate	45126	**22.18**
Lower bearing assembly	45130	**49.72**
Complete stainless steel lower bearing	45130.1	**92.27**
Brush Holder w/cap (1)	45131.1	**93.23**
Lower motor casing	45132	**101.10**
Upper motor casing	45133	**101.10**
Stator 115 V	45135.1	**528.59**
Rotor 115 V	45136.1	**528.59**
Motor field screws (2)	45137	**3.82**

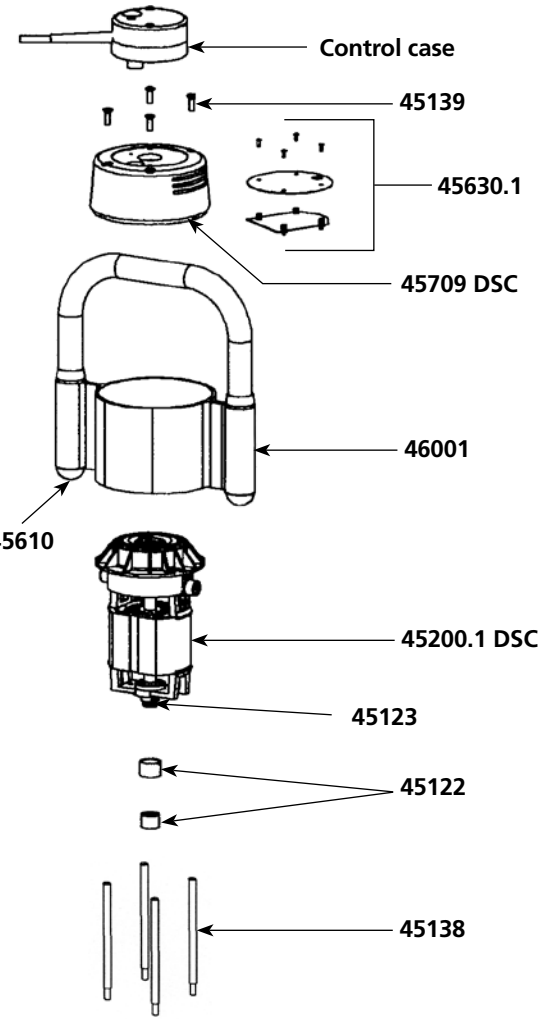

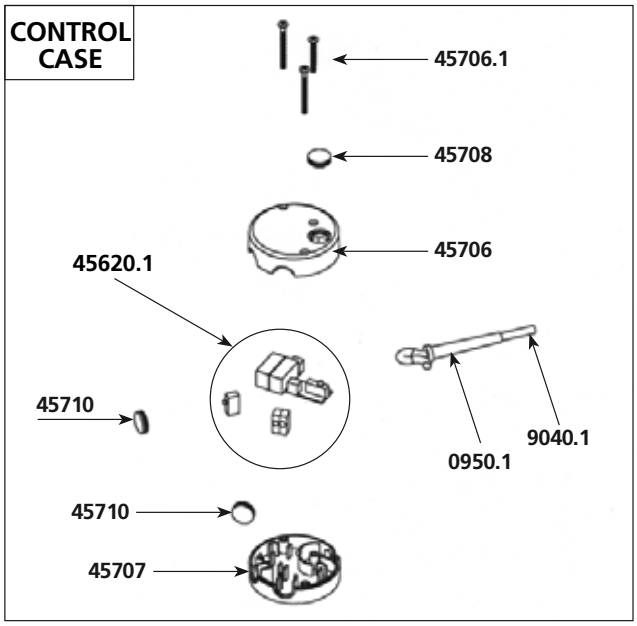

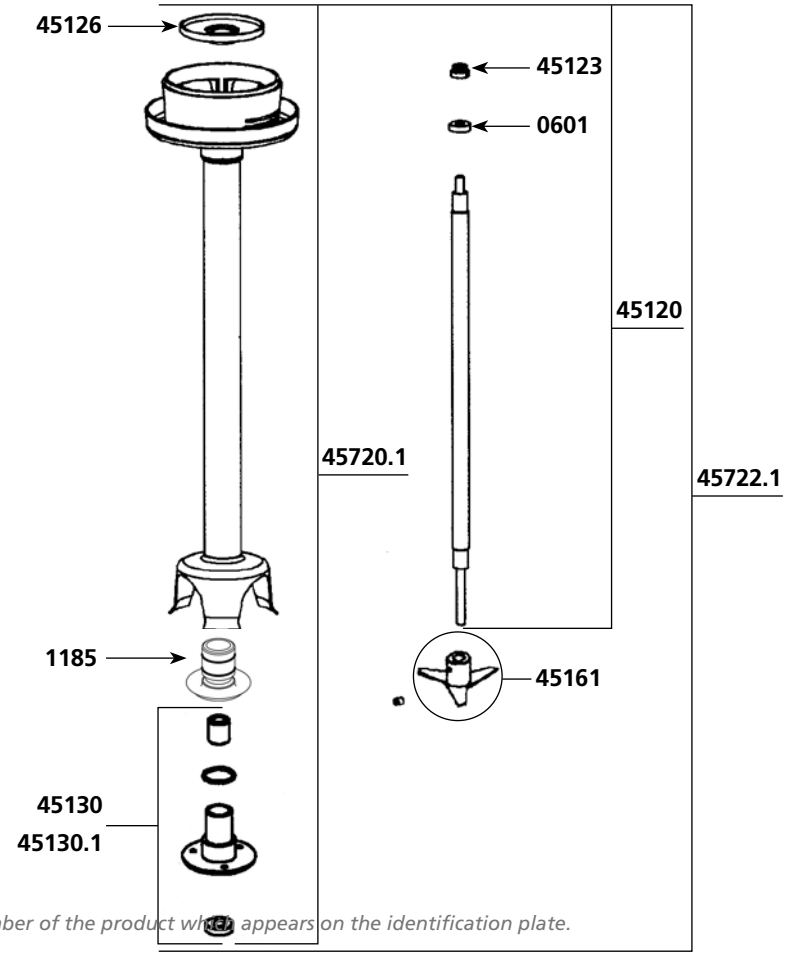

IMPORTANT : *Each spare part order must include the type and the number of the product which appears on the identification plate.*

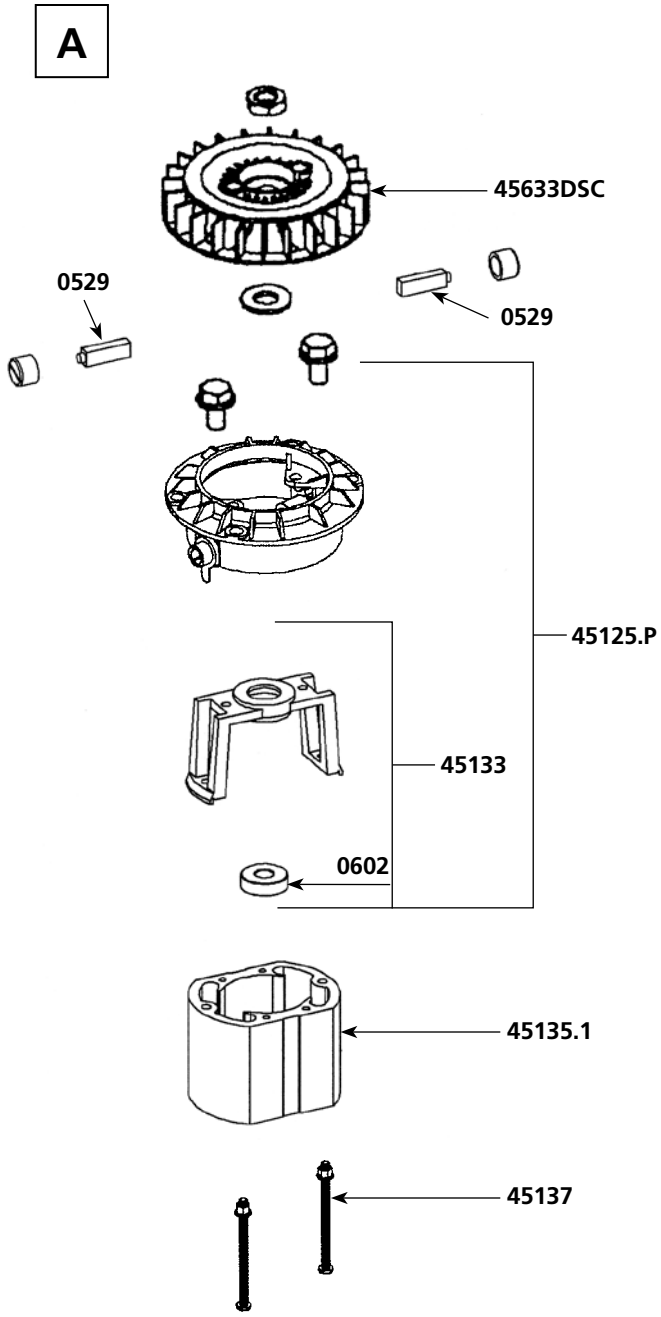

Parts list	Code	List $ Price
Spacer rods (4)	45138	**22.94**
Spacer screws (4)	45139	**3.98**
Cutter blade w/screw	45161	**57.26**
Motor 115 V (complete)	45200.1DSC	**821.45**
Squeezing washer (4)	45230	**8.47**
Sleeve & complete handle & label & cap	45709DSC	**306.31**
Kit w/ shaft. lower bearing. coppler. cutter	45533	**315.93**
Handle cap (2)	45610	**8.34**
Circuit board	45620.1	**180.63**
Regulation circuit board	45630.1	**186.93**
Plastic Fan	45633DSC	**23.66**
Top housing (orange plastic piece)	45706	**27.41**
Screws control case set	45706.1	**2.89**
Orange housing (orange plastic piece)	45707	**25.20**
Lock button rubber cap (unit)	45708	**4.47**
Sleeve + handle + label + stopper	46001	**175.55**
Rubber cap button	45710	**4.26**
Lower housing w/ screws	45711	**48.69**
Foot assembly	45720.1	**535.10**
Complete foot assembly	45722.1	**803.08**
Power cord 115V	9040.1	**49.34**
Lower bearing screws (3)	9902	**1.72**
Stainless steel lower bearing screws (3)	9902.1	**1.90**

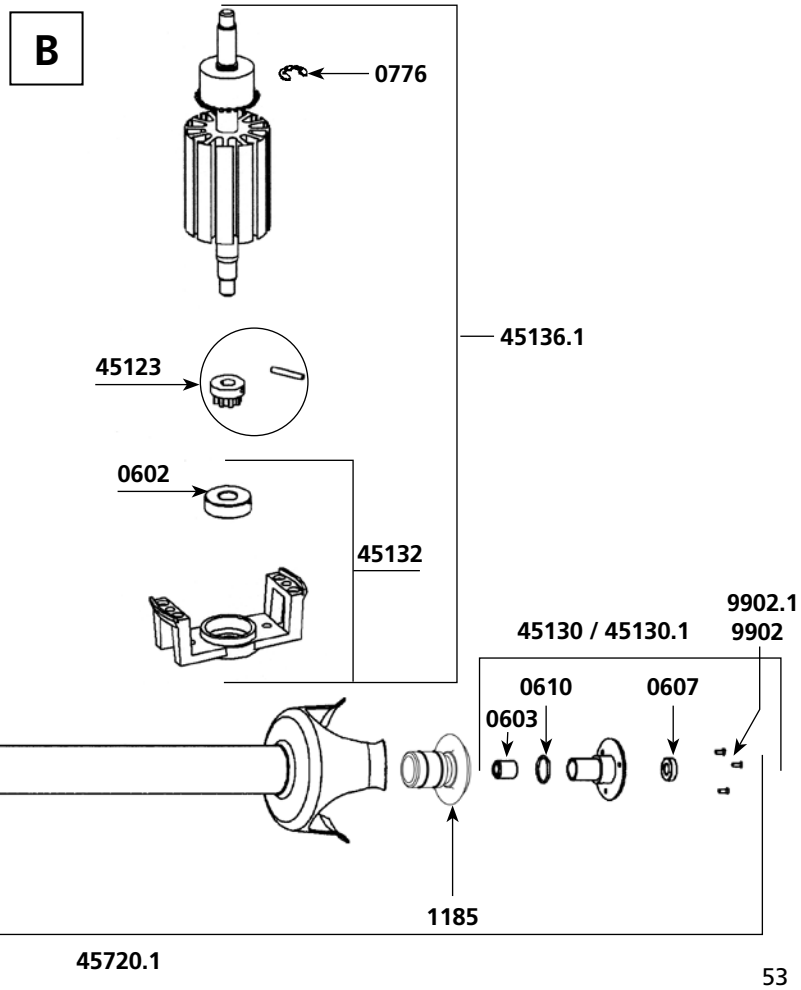

Tel. 1.800.267.7794
Fax : 1.877.668.6623

www.dynamicmixersusa.com
e-mail : info@dynamicmixers.com

Parts list	Code	List $ Price
Carbon brushes (pair)	0529	**22.04**
Ball bearing	0601	**19.61**
Motor ball bearing	0602	**22.78**
Self-lubricating ring	0603	**4.57**
Waterproof seal	0607	**25.60**
O. ring	0610	**2.75**
Toric seal	0641	**4.06**
Rubber washer	0760	**4.38**
Clips	0776	**1.66**
Washer & bolt for fan	0777	**1.66**
Wall bracket	0862	**28.71**
Strain relief 115 V	0950.1	**3.44**
Bearing holder + seal	1185	**31.58**
ID label 115 V	1094	**19.31**
Fan housing Plastic	45125.P	**192.35**
Double isolation plate	45126	**22.18**
Lower bearing assembly	45130	**49.72**
Complete stainless steel lower bearing	45130.1	**92.27**
Brush Holder w/cap (1)	45131	**93.23**
Lower motor casing	45132	**101.10**
Upper motor casing	45133	**101.10**
Stator 115 V	45135.1	**528.59**
Stator screws(2)	45137	**3.82**
Braces (4)	45138	**22.94**
Brace screws (4)	45139	**3.98**
Cutter blade w/ screw	45161	**57.26**
Squeezing washers (4)	45230	**8.47**
Upper motor casing	45503	**306.31**
Handle cap (2)	45610	**8.34**
Circuit board 115 V	45620.1	**180.63**
Foot assembly w/ stainless steel bearing assembly	45631	**509.66**
Shaft & ball bearing	45632	**202.80**
Fan	45633	**24.61**
Complete foot assembly (stainless steel lower bearing)	45635.1	**827.10**
Top housing (orange plastic piece)	45706	**27.41**
Screws control case set	45706.1	**2.89**
Lower housing (orange plastic piece)	45707	**25.20**
Handle cap protector (unit)	45708	**4.47**

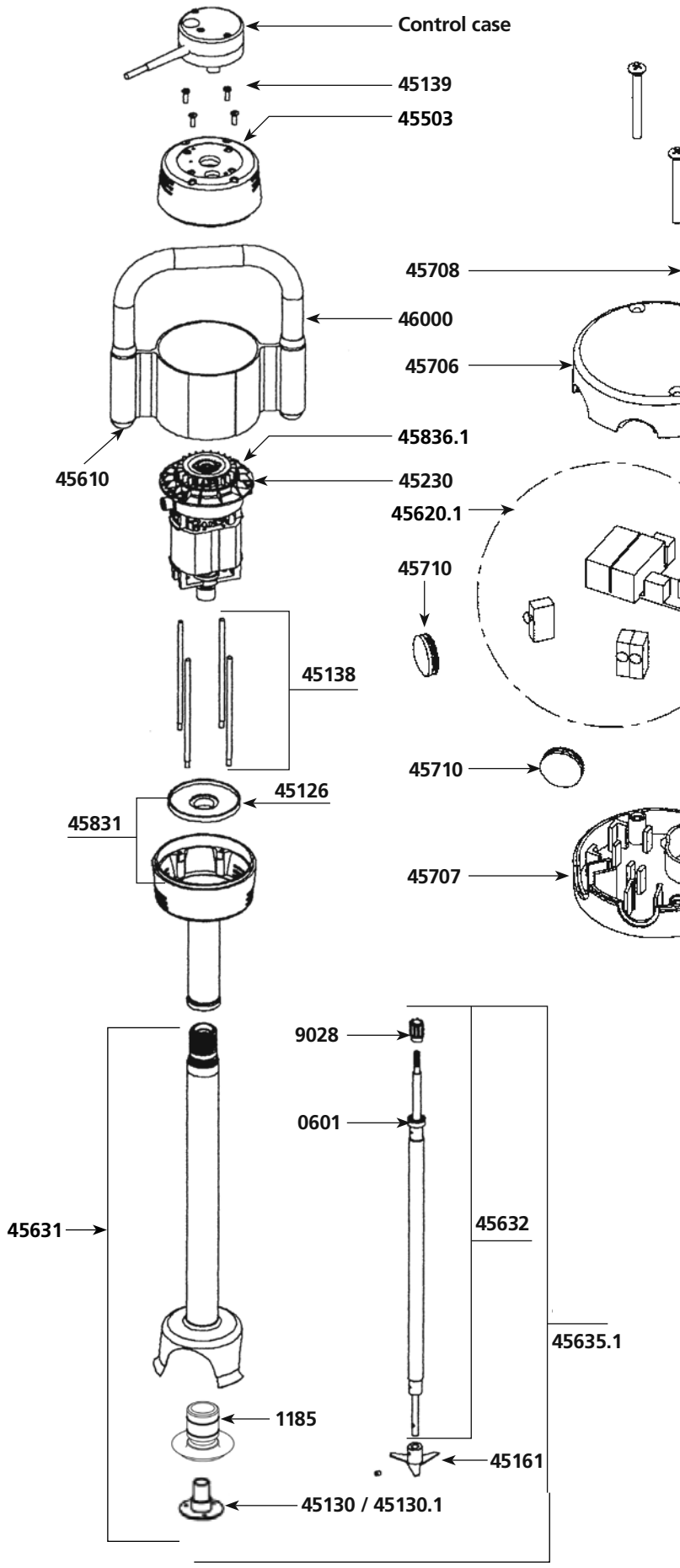

IMPORTANT : *Each spare part order must include the type and the number of the product which appears on the identification plate.*

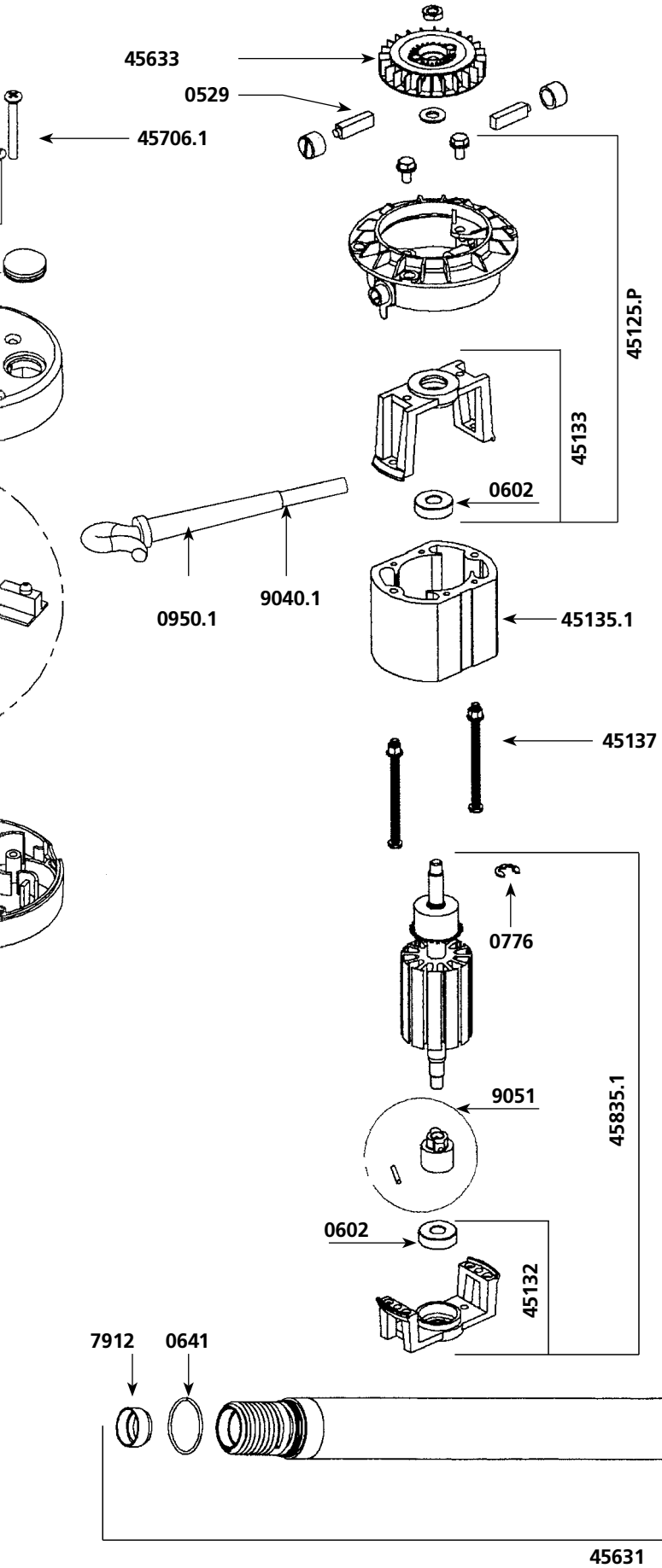

Parts list	Code	List $ Price
Handle cap protector (unit)	45710	**4.26**
Complete housing w/ screws	45711	**48.69**
Lower housing	45831	**472.38**
Rotor 115 V	45835.1	**528.59**
Motor 115 V	45836.1	**821.45**
Sleeve & complete handle & label & cap	46000	**175.55**
Ball bearing ring	7912	**5.18**
Motor & shaft drive sprocket	9028	**13.08**
Power cord 115 V	9040.1	**49.34**
Coupling casing + pin	9051	**20.74**
Lower bearing screws - Stainless steel (3)	9902	**1.72**
Stainless steel lower bearing screws (3)	9902.1	**1.90**

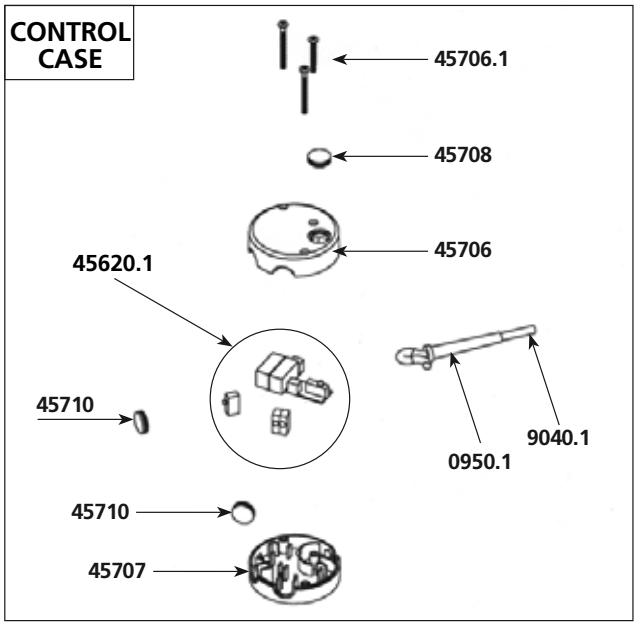

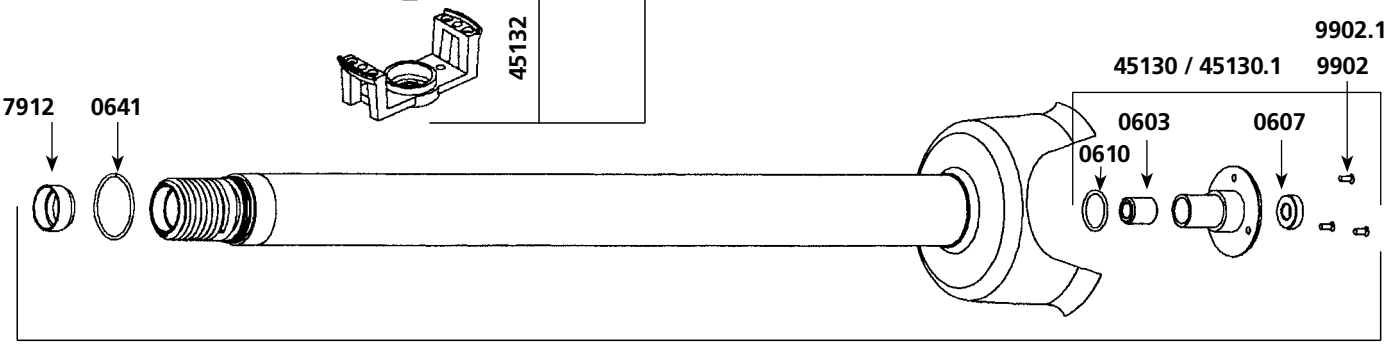

Tel. 1.800.267.7794
Fax : 1.877.668.6623

www.dynamicmixersusa.com
e-mail : info@dynamicmixers.com

Parts list	Code	List $ Price
Carbon brushes (pair)	0529H	**23.47**
Ball bearing	0601i	**20.92**
Equipped output axle	0807H	**50.38**
Ball bearing ring	119950	**5.93**
Ball bearing ring	119964	**6.22**
Output shaft	45121H	**124.65**
Coupling sleeves	45122	**33.34**
Motor & shaft drive sprocket	45123	**31.02**
Plastic fan housing	45125H	**205.16**
Spacer rods (4)	45138H	**24.40**
Spacer screws (4)	45139	**3.98**
Motor 230 V	45201H	**908.79**
Motor 115 V	45201H.1	**908.79**
Squeezing washer (4)	45230	**8.47**
Top housing	45503	**306.31**
Handle cap (2)	45610H	**8.87**
Plastic Fan	45633 DSC	**23.66**
Sleeve & complete handle & label & cap	45709H	**184.24**
Complete control casing 115V	45712.1	**293.10**
Lower housing	45831H	**500.72**
Motor & shaft drive sprocket	9028	**13.08**

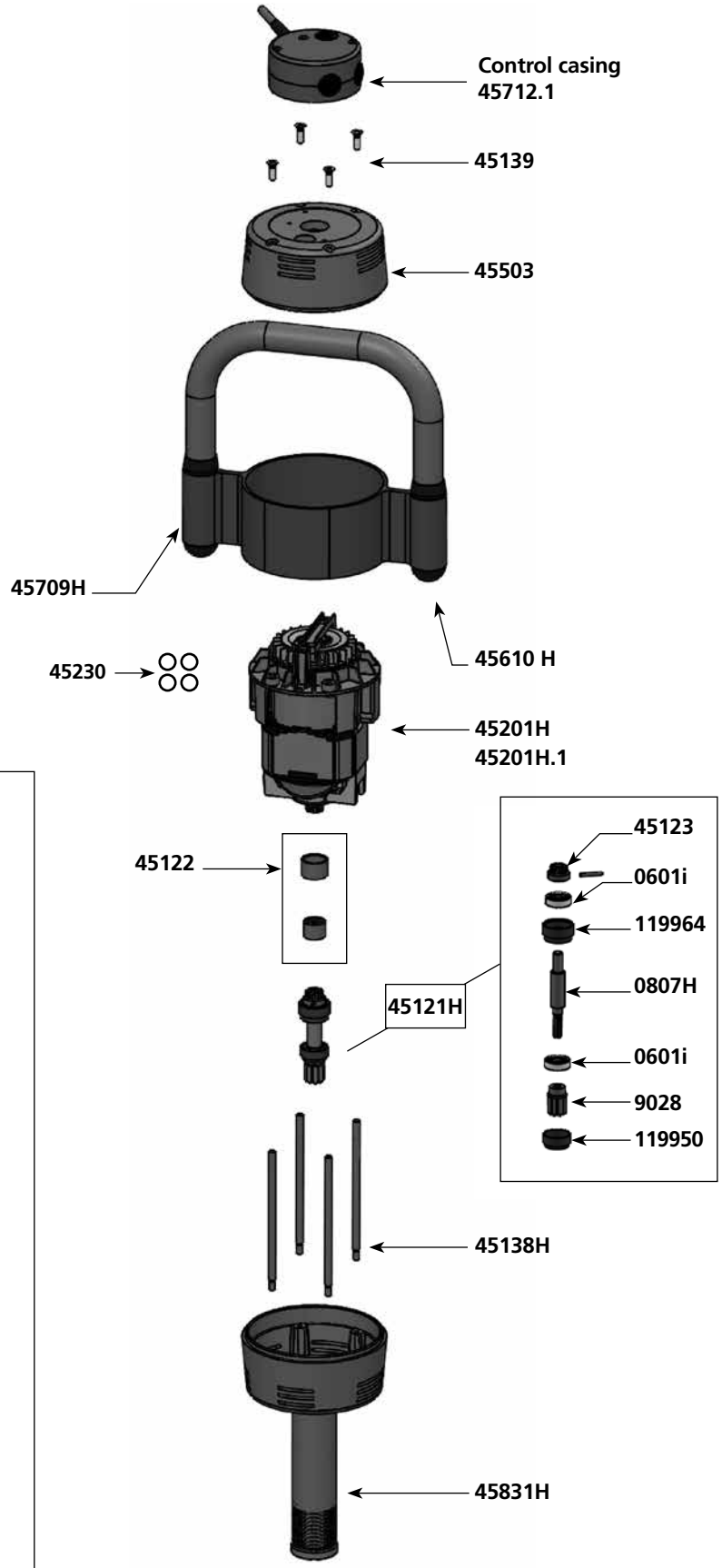

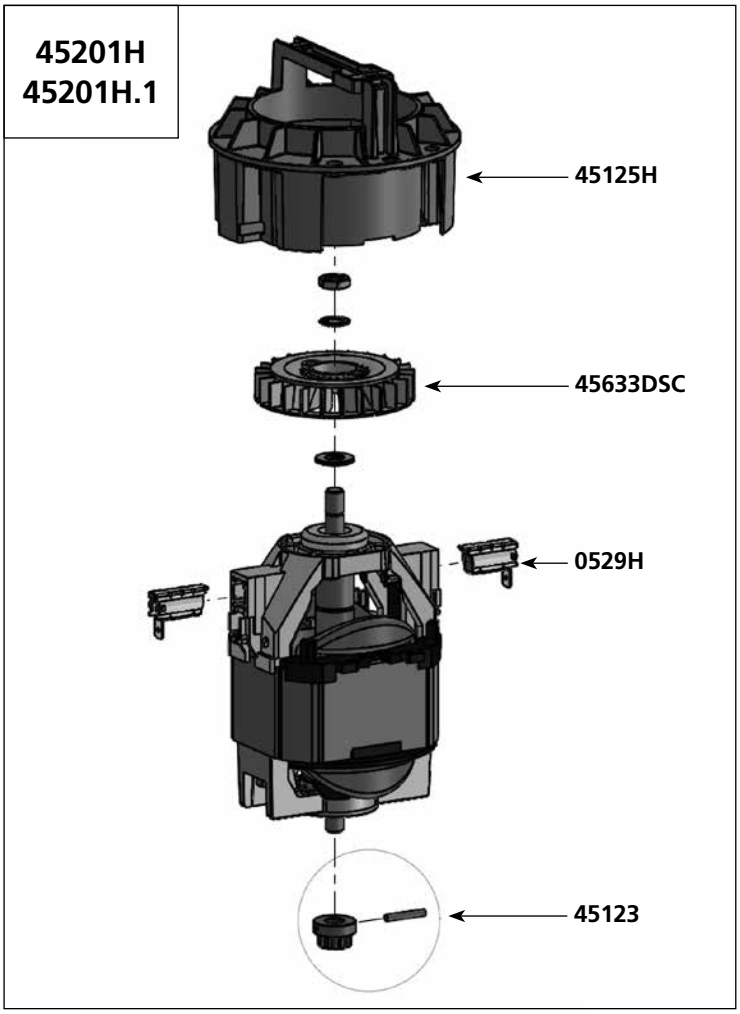

IMPORTANT : *Each spare part order must include the type and the number of the product which appears on the identification plate.*

SMX 750 ES Attachment - Ref AC075T
(Complete Attachment)

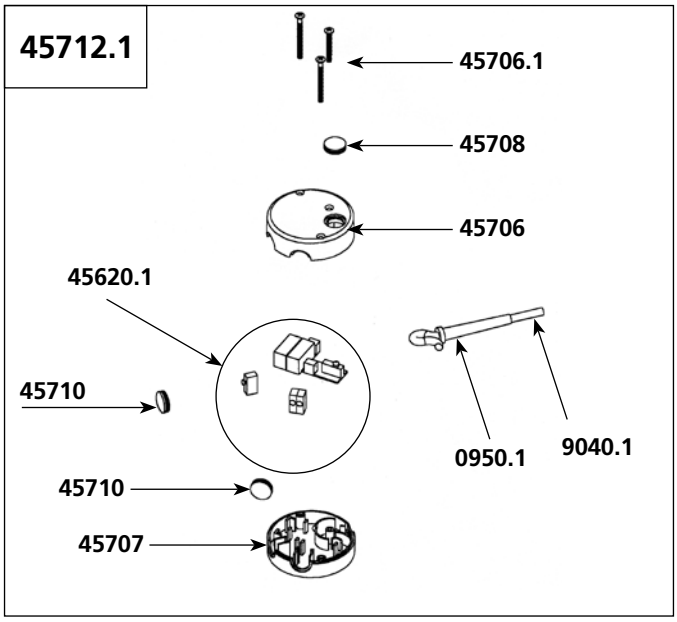

Parts list	Code	List $ Price
Ball bearing	0601i	**20.92**
Self-lubricating ring	0603	**4.57**
Waterproof seal	0607	**25.60**
O. ring	0610PD	**4.36**
Toric seal	0641	**4.06**
Friction washer	0838L	**7.25**
Wall bracket	0862	**28.71**
Strain relief 115 V	0950.1	**3.44**
Ball bearing ring	7912	**5.18**
Motor & shaft drive sprocket	9028	**13.08**
Power cord 115 V	9040.1	**49.34**
Coupling casing + pin	9051H	**48.41**
Removable complete bell	45130H	**494.59**
Cutter blade w/ screw	45161	**57.26**
Shaft & bearing	45328	**220.54**
Foot assembly	45329	**570.65**
Circuit board 115 V	45620.1	**180.63**
Top housing (orange plastic piece)	45706	**27.41**
Screws control case set	45706.1	**2.89**
Lower housing (orange plastic piece)	45707	**25.20**
Handle cap protector (unit)	45708	**4.47**
Handle cap protector (unit)	45710	**4.26**

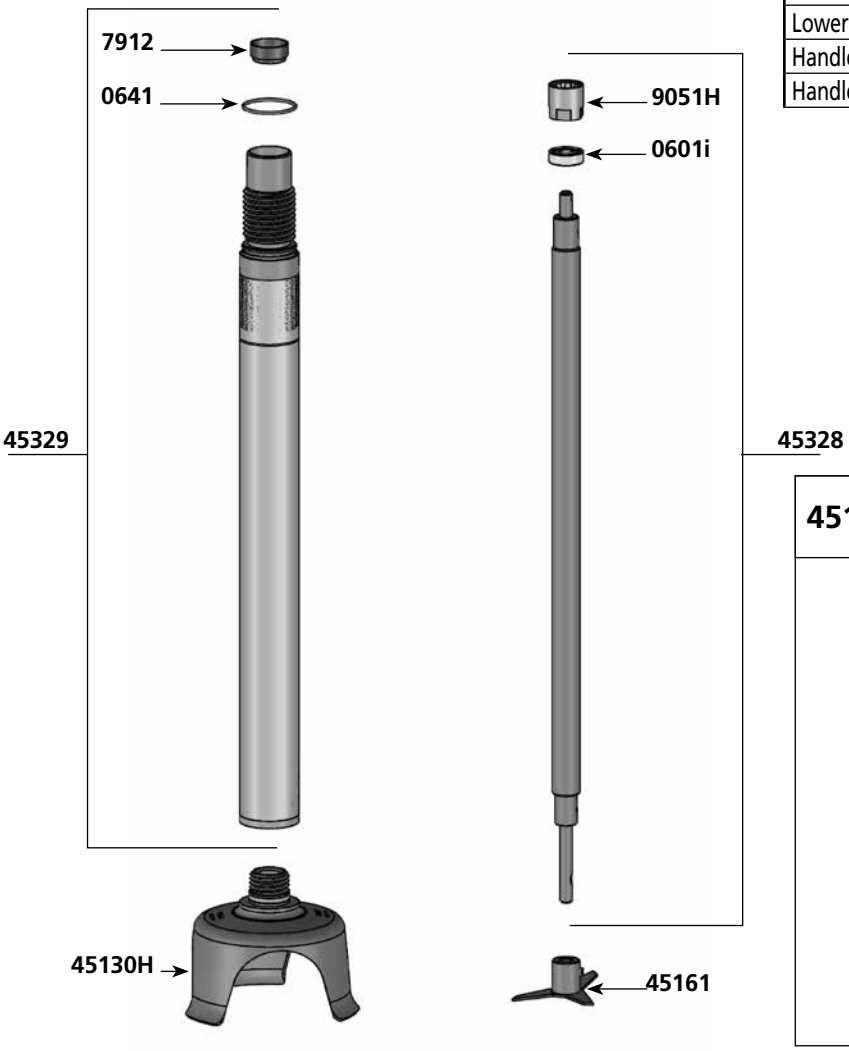

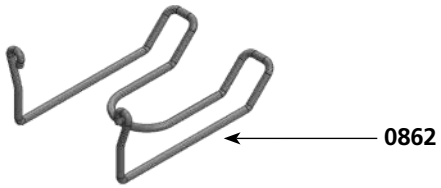

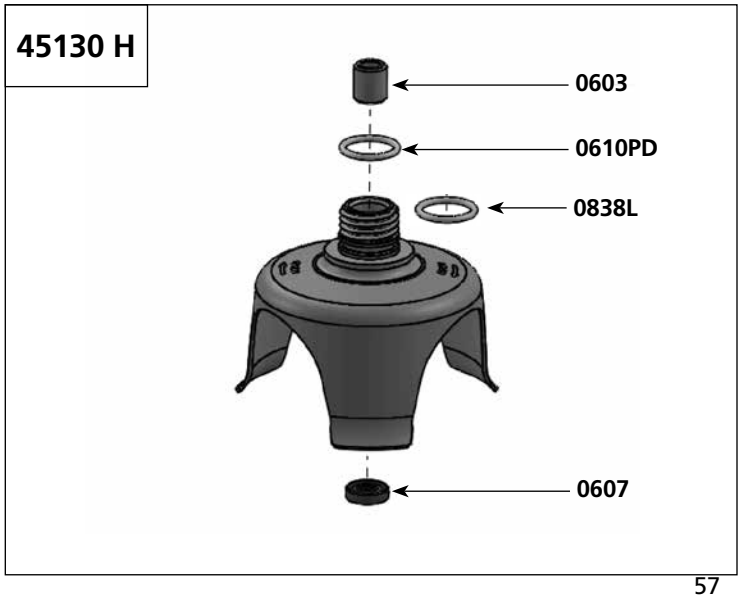

Tel. 1.800.267.7794
Fax : 1.877.668.6623

www.dynamicmixersusa.com
e-mail : info@dynamicmixers.com

Parts list	Code	List $ Price
Aluminium Fan	0509	**13.38**
Motor brushes (pair)	0529	**22.04**
Ball bearing	0601	**19.61**
Motor ball bearing	0602	**22.78**
Self-lubricating ring	0603	**4.57**
Waterproof seal	0607	**25.60**
O. ring	0610	**2.75**
Toric seal	0641	**4.06**
Rubber washer	0760	**4.38**
Clips	0776	**1.66**
Washer & bolt for fan	0777	**1.66**
Wall bracket	0862	**28.71**
Strain relief 115 V	0950.1	**3.44**
ID label 115 V	1074	**19.31**
Lower bearing assembly support	1185	**31.58**
Fan housing Plastic	45125.P	**192.35**
Double isolation plate	45126	**22.18**
Lower bearing assembly	45130	**49.72**
Complete stainless steel lower bearing	45130.1	**92.27**
Brush Holder w/cap (1)	45131	**93.23**
Lower motor casing	45132	**101.10**
Upper motor casing	45133	**101.10**
Stator 115 V	45135.1	**528.59**
Stator screws(2)	45137	**3.82**
Spacer rods (4)	45138	**22.94**
Spacer screws (4)	45139	**3.98**
Cutter blade w/screw	45161	**57.26**
Squeezing washer (4)	45230	**8.47**
Top housing	45503	**306.31**
Handle cap (2)	45610	**8.34**
Circuit board 115 V	45620.1	**180.63**

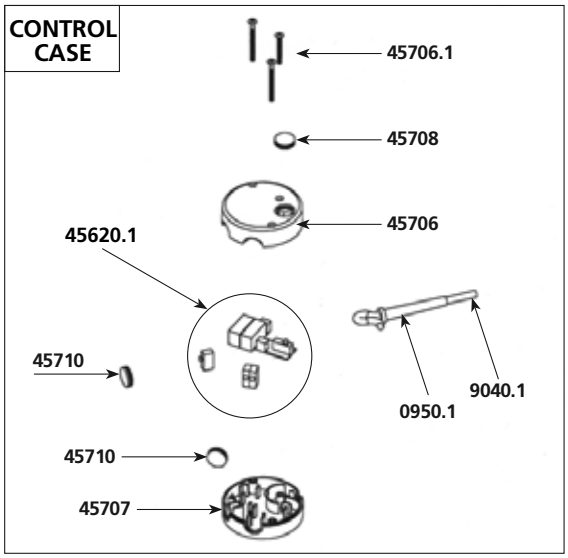

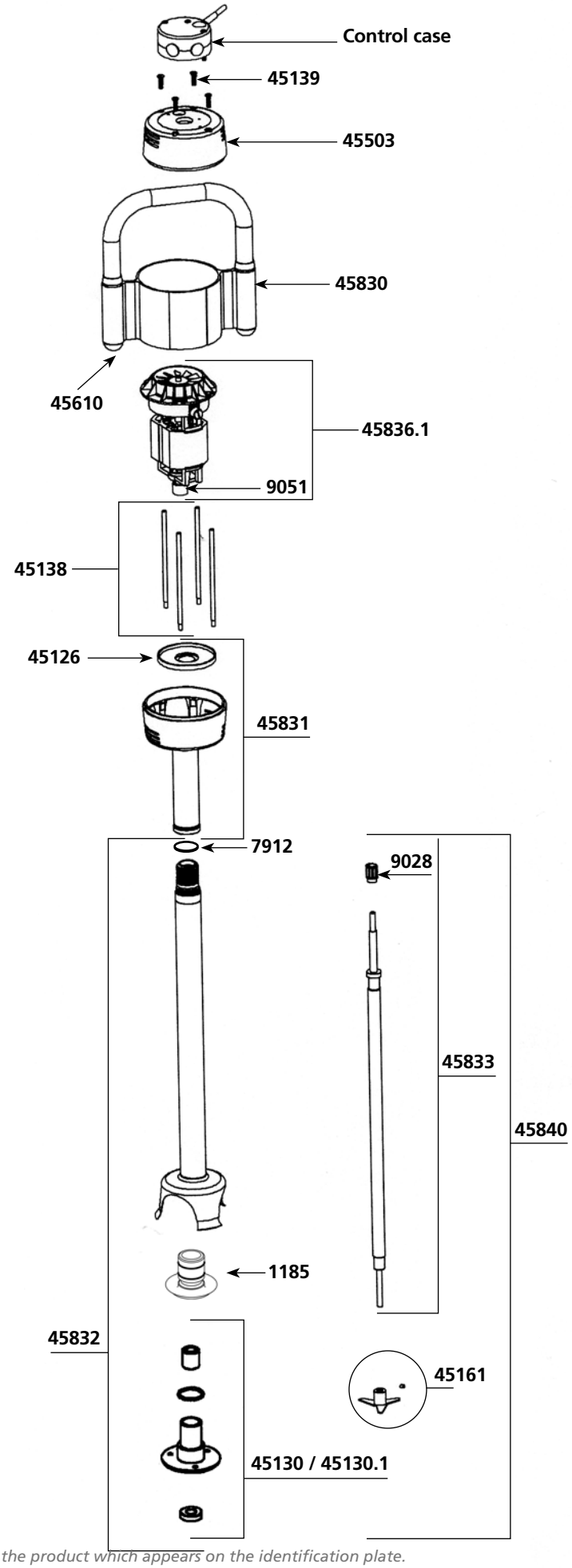

IMPORTANT : *Each spare part order must include the type and the number of the product which appears on the identification plate.*

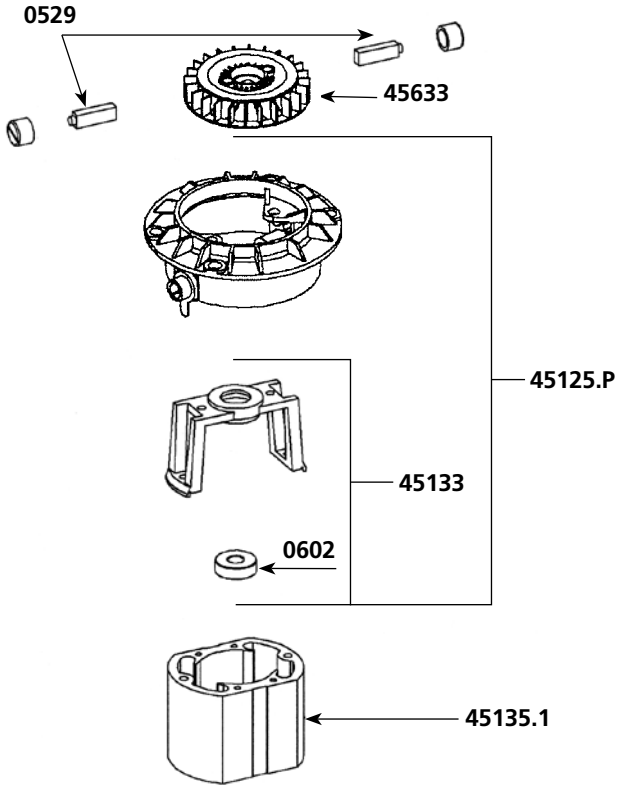

Parts list	Code	List $ Price
Plastic fan	45633	**24.61**
Top housing (orange plastic piece)	45706	**27.41**
Screws control case set	45706.1	**2.89**
Lower housing (orange plastic piece)	45707	**25.20**
Lock button rubber cap (unit)	45708	**4.47**
Handle cap protector (unit)	45710	**4.26**
Orange housing w/ screws	45711	**48.69**
Sleeve & complete handle & label & cap	45830	**175.55**
Lower housing (aluminum)	45831	**472.38**
Foot assembly w/ bearing assembly	45832	**543.29**
Shaft. ball bearing + coupler	45833	**215.39**
Kit w/ shaft, lower bearing, coupler, cutter	45834	**324.89**
Rotor 115 V	45835.1	**528.59**
Motor 115 V (complete)	45836.1	**821.45**
Complete foot assembly	45840	**843.11**
Ball bearing sleeve	7912	**5.18**
Coupler for shaft	9028	**13.08**
Power cord (115v)	9040.1	**49.34**
Coupling casing + pin	9051	**20.74**
Lower bearing screws (3)	9902	**1.72**
Stainless steel lower bearing screws (3)	9902.1	**1.90**

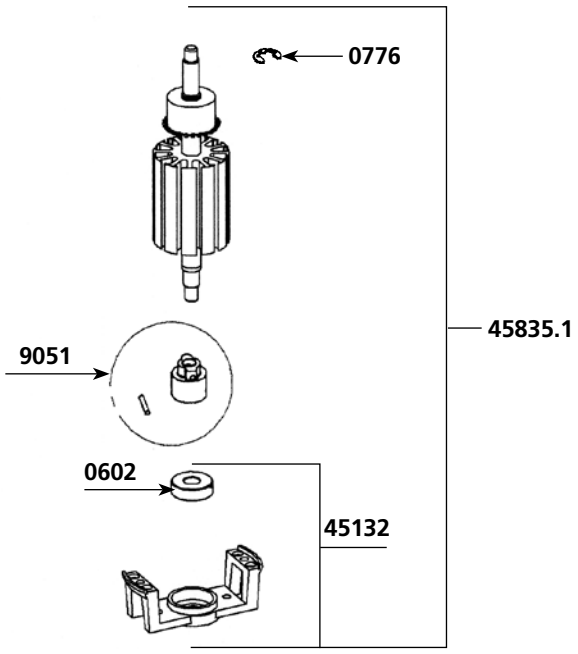

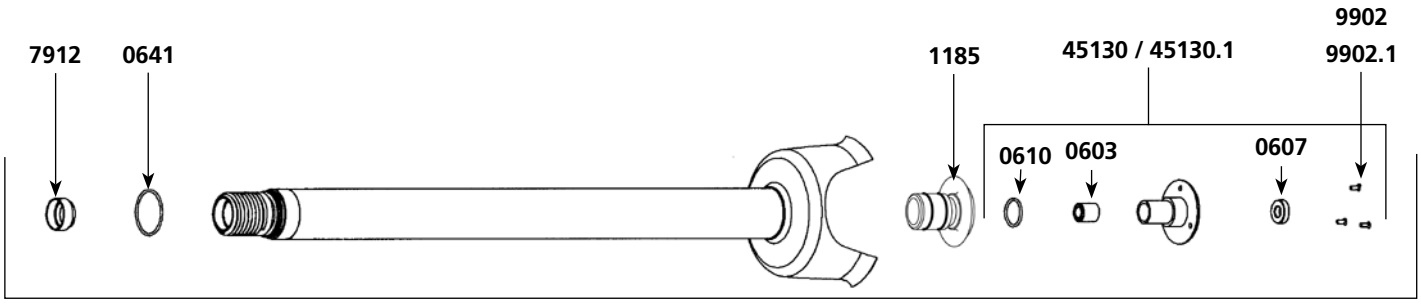

45832

Tel. 1.800.267.7794
Fax : 1.877.668.6623

www.dynamicmixersusa.com
e-mail : info@dynamicmixers.com

SMX 800 DSC - 115 V

Parts list	Code	List $ Price
Motor brushes (pair)	0529	**22.04**
Ball bearing	0601	**19.61**
Motor ball bearing	0602	**22.78**
Self-lubricating ring	0603	**4.57**
Waterproof seal	0607	**25.60**
O. ring	0610	**2.75**
Toric seal	0641	**4.06**
Rubber washer	0760	**4.38**
Clips	0776	**1.66**
Washer & bolt for fan	0777	**1.66**
Wall bracket	0862	**28.71**
Strain relief 115 V	0950.1	**3.44**
ID label 115V	1099	**19.31**
Lower bearing assembly support	1185	**31.58**
Fan housing Plastic	45125.P	**192.35**
Double isolation plate	45126	**22.18**
Lower bearing assembly	45130	**49.72**
Complete stainless steel lower bearing	45130.1	**92.27**
Brush Holder w/cap (1)	45131.1	**93.23**
Lower motor casing	45132	**101.10**
Upper motor casing	45133	**101.10**
Stator 115 V	45135.1	**528.59**
Motor field screws (4)	45137	**3.82**
Spacer rods (4)	45138	**22.94**
Spacer screws (4)	45139	**3.98**
Cutter blade w/screw	45161	**57.26**
Squeezing washers (4)	45230	**8.47**
Top housing	45503DSC	**306.31**
Handle cap (2)	45610	**8.34**
Circuit board	45620.1	**180.63**
Regulation circuit board	45630.1	**186.93**
Fan (DSC)	45633DSC	**23.66**
Top housing (orange plastic piece)	45706	**27.41**
Screws control case set	45706.1	**2.89**
Lower housing (orange plastic piece)	45707	**25.20**
Lock button rubber cap (unit)	45708	**4.47**
Rubber button cap	45710	**4.26**

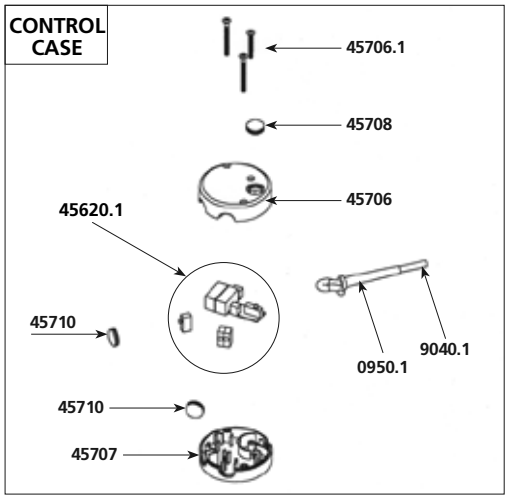

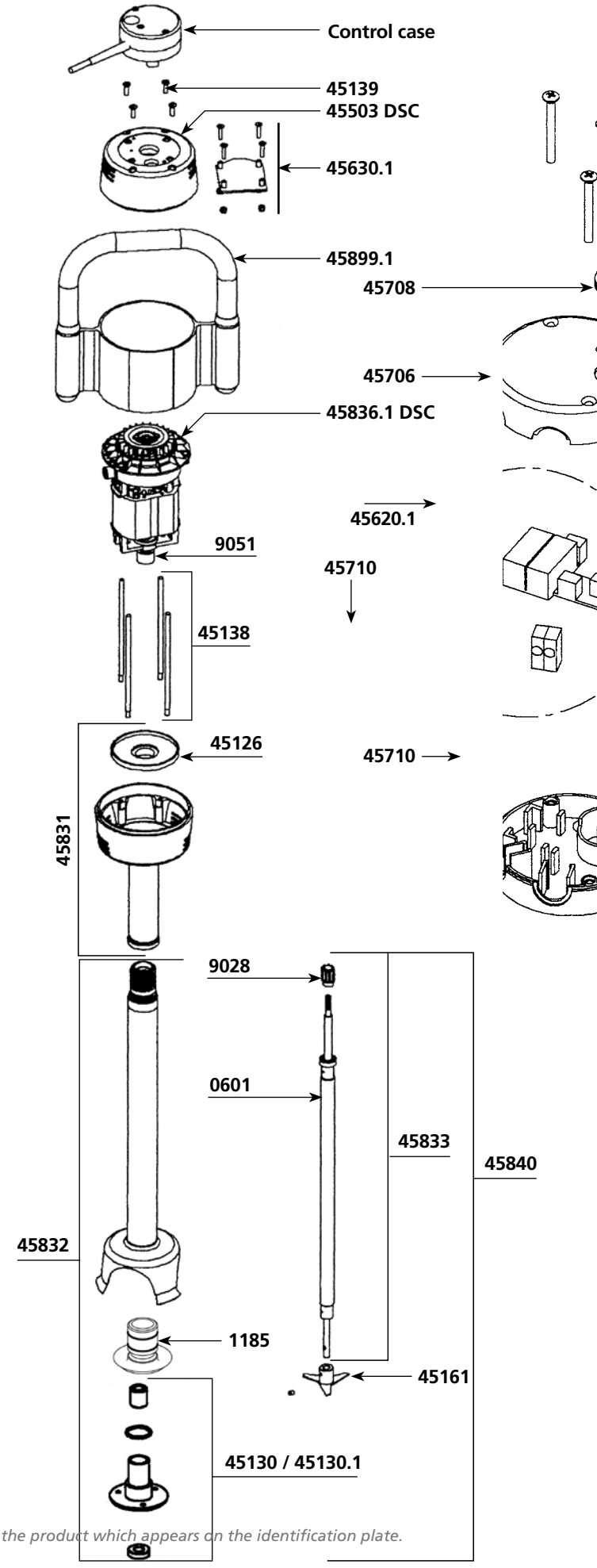

IMPORTANT : *Each spare part order must include the type and the number of the product which appears on the identification plate.*

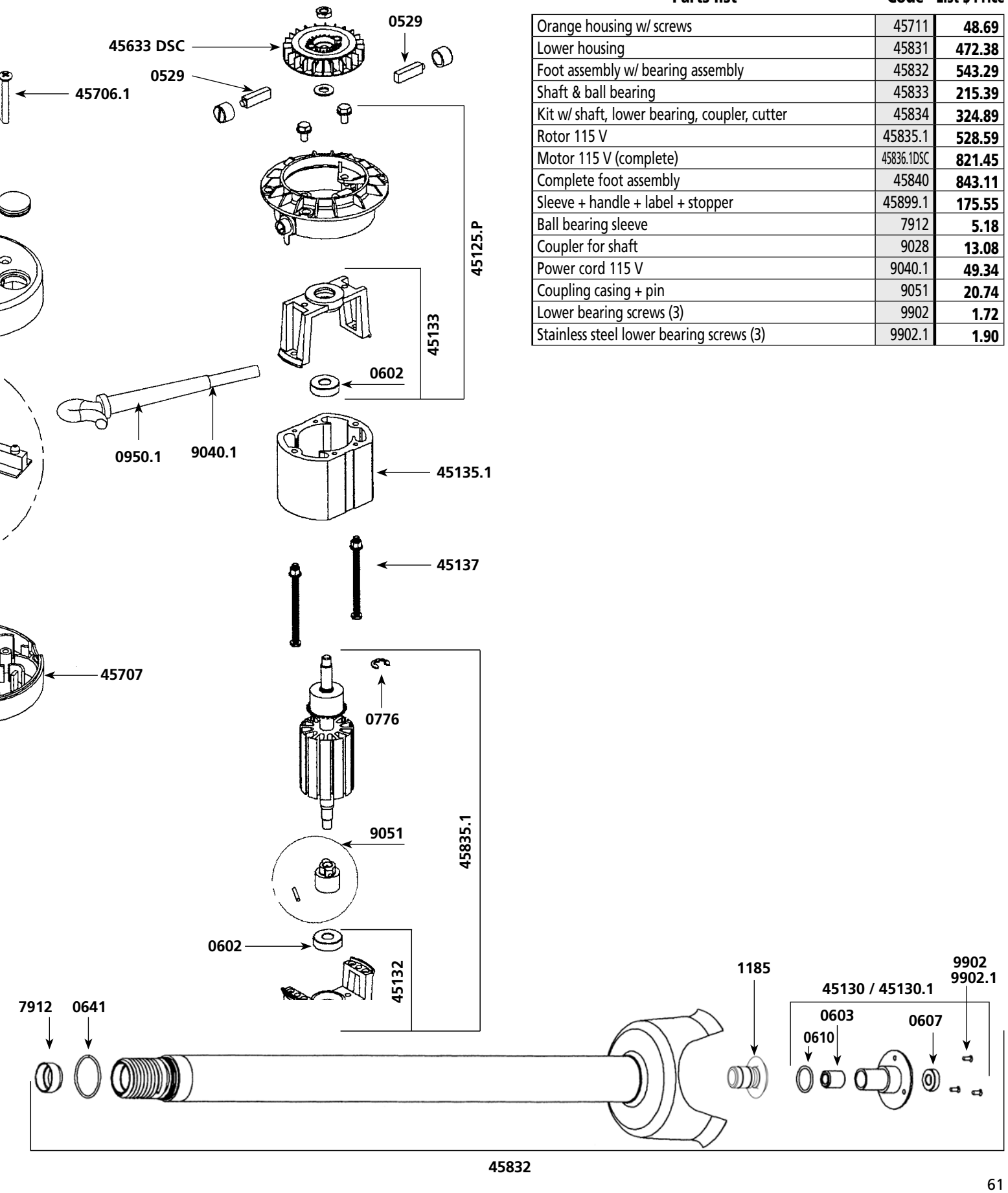

Parts list	Code	List $ Price
Orange housing w/ screws	45711	**48.69**
Lower housing	45831	**472.38**
Foot assembly w/ bearing assembly	45832	**543.29**
Shaft & ball bearing	45833	**215.39**
Kit w/ shaft, lower bearing, coupler, cutter	45834	**324.89**
Rotor 115 V	45835.1	**528.59**
Motor 115 V (complete)	45836.1DSC	**821.45**
Complete foot assembly	45840	**843.11**
Sleeve + handle + label + stopper	45899.1	**175.55**
Ball bearing sleeve	7912	**5.18**
Coupler for shaft	9028	**13.08**
Power cord 115 V	9040.1	**49.34**
Coupling casing + pin	9051	**20.74**
Lower bearing screws (3)	9902	**1.72**
Stainless steel lower bearing screws (3)	9902.1	**1.90**

Tel. 1.800.267.7794
Fax : 1.877.668.6623
www.dynamicmixersusa.com
e-mail : info@dynamicmixers.com

Parts list	Code	List $ Price
Carbon brushes (pair)	0529H	**23.47**
Ball bearing	0601i	**20.92**
Equipped output axle	0807H	**50.38**
Ball bearing ring	119950	**5.93**
Ball bearing ring	119964	**6.22**
Output shaft	45121H	**124.65**
Coupling sleeves	45122	**33.34**
Motor & shaft drive sprocket	45123	**31.02**
Fan housing Plastic	45125H	**205.16**
Spacer rods (4)	45138H	**24.40**
Spacer screws (4)	45139	**3.98**
Motor 230 V	45202H	**942.80**
Motor 115 V	45202H.1	**942.80**
Squeezing washer (4)	45230	**8.47**
Top housing	45503	**306.31**
Handle cap (2)	45610H	**8.87**
Plastic Fan	45633 DSC	**23.66**
Sleeve & complete handle & label & cap	45709H	**184.24**
Complete control casing 115V	45712.1	**293.10**
Lower housing	45831H	**500.72**

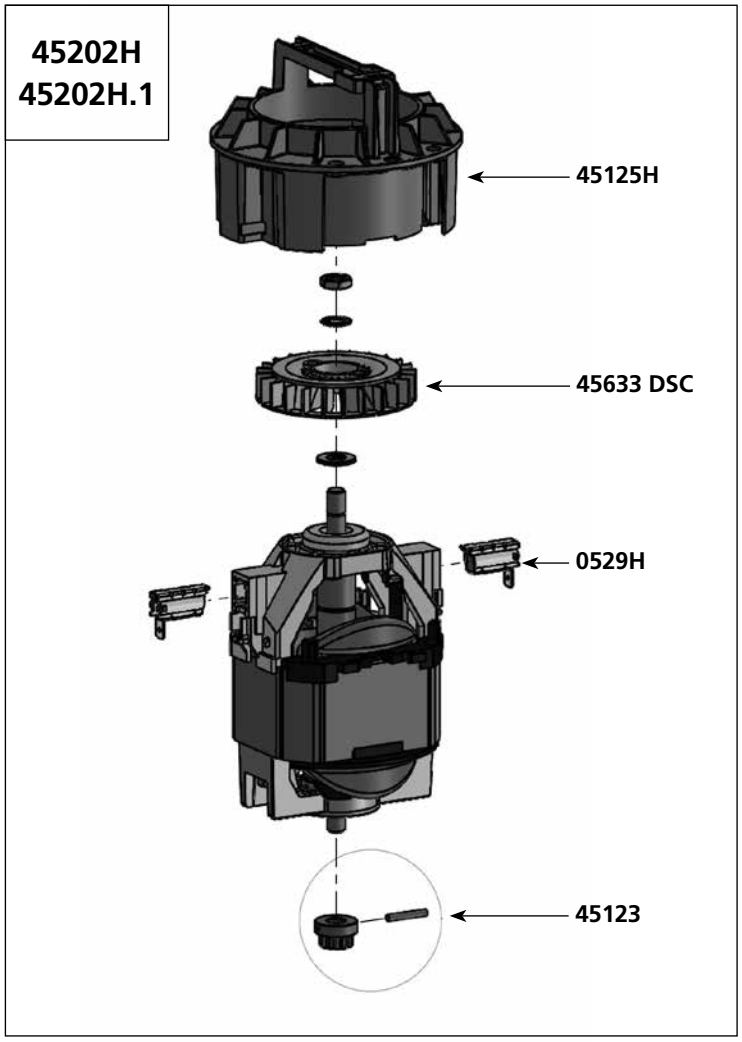

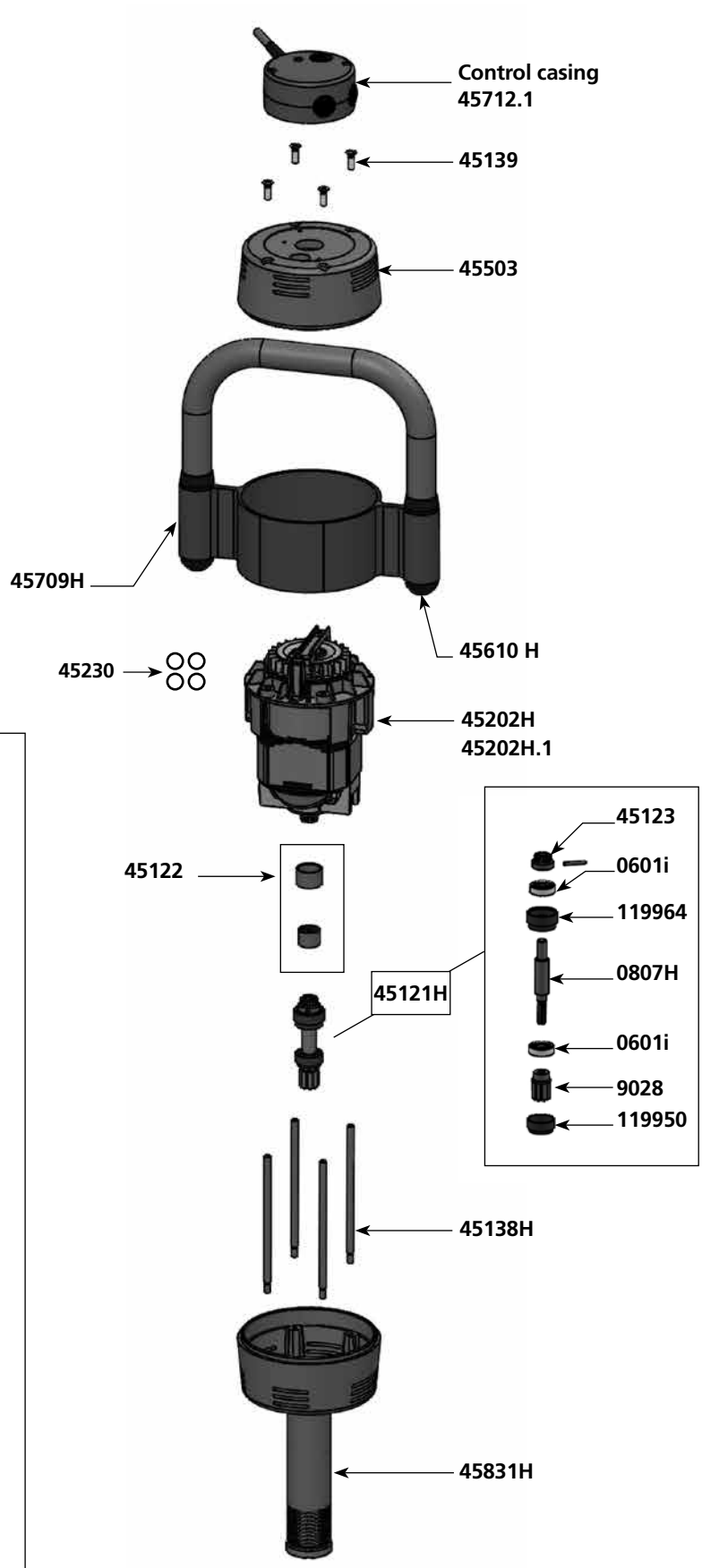

IMPORTANT : *Each spare part order must include the type and the number of the product which appears on the identification plate.*

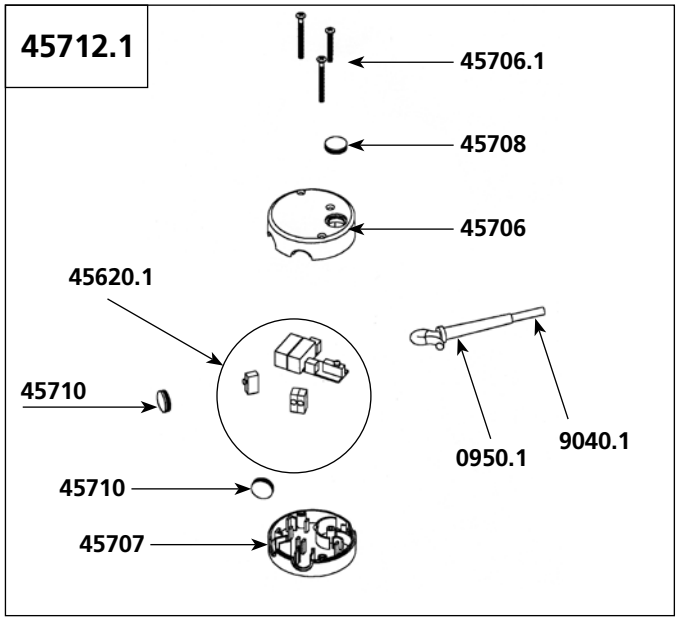

SMX 850 ES Attachment - Ref AC076T
(Complete Attachment)

Parts list	Code	List $ Price
Ball bearing	0601i	**20.92**
Self-lubricating ring	0603	**4.57**
Waterproof seal	0607	**25.60**
O. ring	0610PD	**4.36**
Toric seal	0641	**4.06**
Friction washer	0838L	**7.25**
Wall bracket	0862	**28.71**
Strain relief 115 V	0950.1	**3.44**
Ball bearing ring	7912	**5.18**
Motor & shaft drive sprocket	9028	**13.08**
Power cord 115 V	9040.1	**49.34**
Coupling casing + pin	9051H	**48.41**
Removable complete bell	45130H	**494.59**
Cutter blade w/ screw	45161	**57.26**
Shaft & bearing	45324	**234.95**
Foot assembly	45325	**580.10**
Circuit board 115 V	45620.1	**180.63**
Top housing (orange plastic piece)	45706	**27.41**
Screws control case set	45706.1	**2.89**
Lower housing (orange plastic piece)	45707	**25.20**
Handle cap protector (unit)	45708	**4.47**
Handle cap protector (unit)	45710	**4.26**

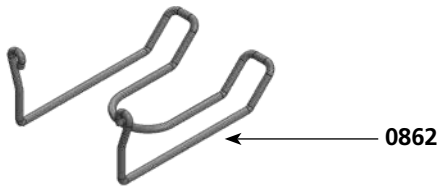

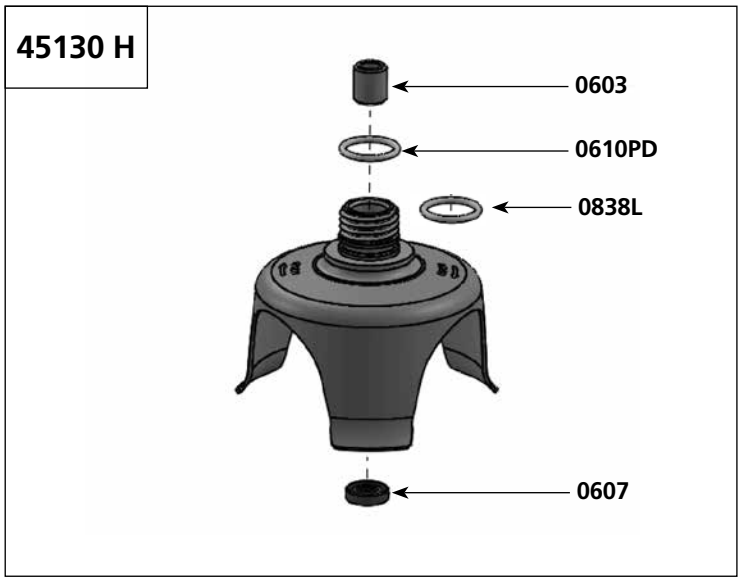

Tel. 1.800.267.7794
Fax : 1.877.668.6623

www.dynamicmixersusa.com
e-mail : info@dynamicmixers.com

Parts list	Code	List $ Price
O. ring	0641	**4.06**
Self-lubricating ring	0666	**18.80**
Waterproof seal	0667	**40.05**
Blender bell	1412	**231.65**
Blender hammer	1413	**78.74**
Blender key	1445	**25.83**
Plastic sleeve	7912	**5.18**
Coupler for armature	9028	**13.08**
Shaft	45326	**241.67**
Foot assembly	45327	**493.02**
Ball bearing	0601I	**20.92**
Coupler for armature	9051H	**48.41**

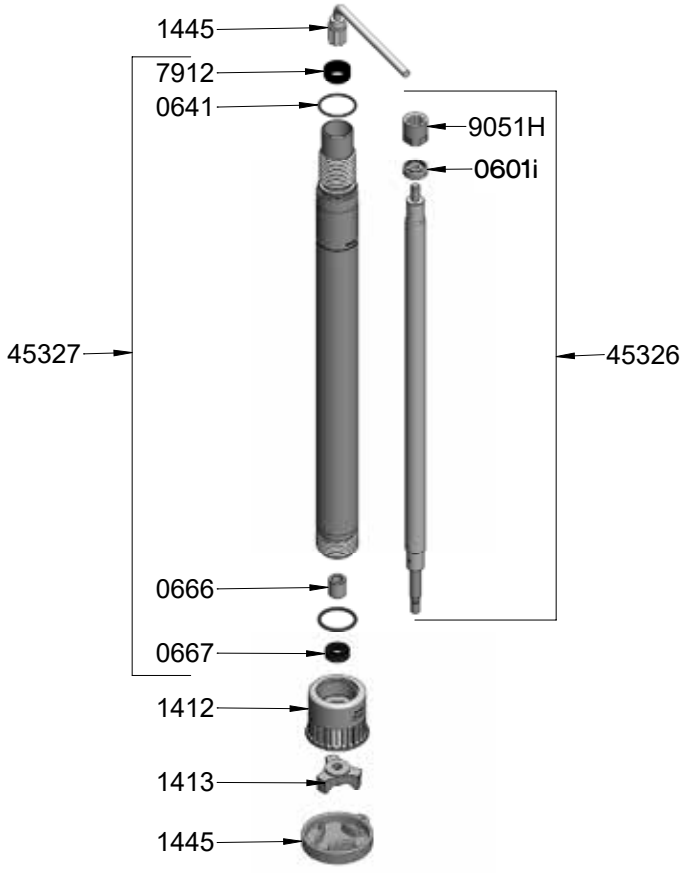

IMPORTANT : *Each spare part order must include the type and the number of the product which appears on the identification plate.*

Jib assembling.....9346

Parts list	Code	List $ Price
Transmission belt	0625	**195.86**
Front jib cap	0786	**73.89**
Back jib cap	0786P	**115.84**
Cover	089915	**320.57**
Directing pulley + hub	9362	**478.94**
Conducting pulley + hub	9363	**327.70**
Screw set + washers for fixing the motor	9364	**45.38**
Screw set + washers for fixing the jib	9365	**55.43**
Screw set + washers for fixing the axle-brake	9366	**40.33**
Screw set + washers for fixing the tube	9367	**55.43**
Screw set + washers for fixing the cover	9368	**55.17**
Motor	9369	**1386.40**
Screw set + nuts for fixing the steel sheet on the jib	9370	**25.21**
Screw set for fixing the steel sheet on the motor housing	9371	**27.74**

Electrical Box

Parts list	Code	List $ Price
Box case + pe	9390	**363.75**
Stainless steel box + pe	9390.1	**1350.40**
Motor connector	9391	**205.46**
Phased 2.2kw variator	9392	**2284.21**
Connection terminal	9393	**76.90**
Stop push button	9394	**112.95**
"Emergency stop" button	9395	**134.06**
On/off light	9396	**47.09**
"On/off" push button	9397	**112.95**
Potentiometer + push button	9398	**152.33**
PE DEI DSI button	9399	**305.73**
Thermal relay	93991	**367.30**

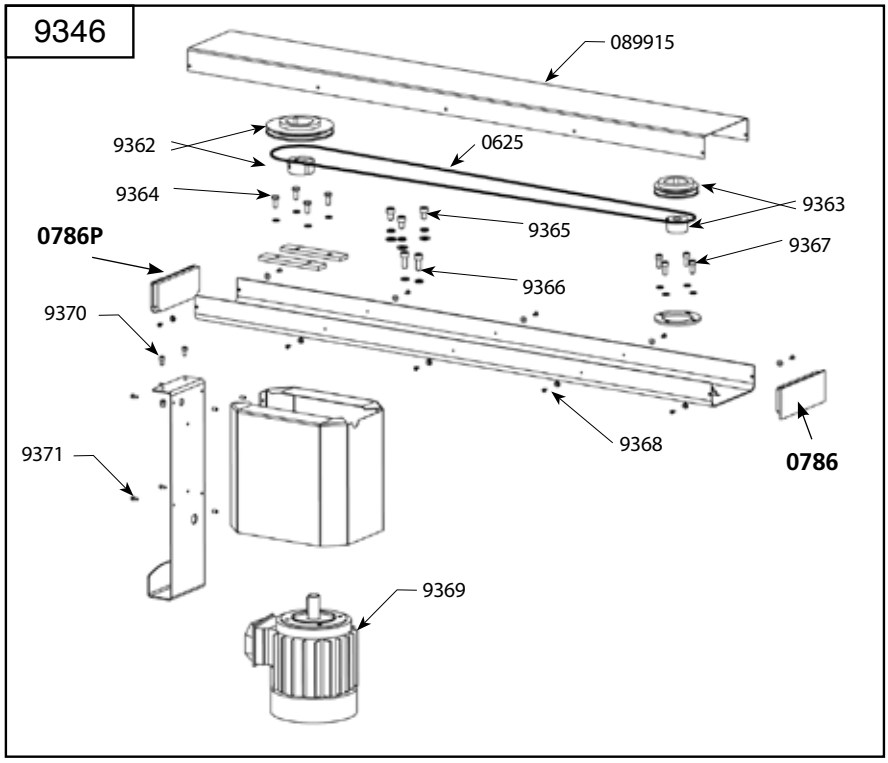

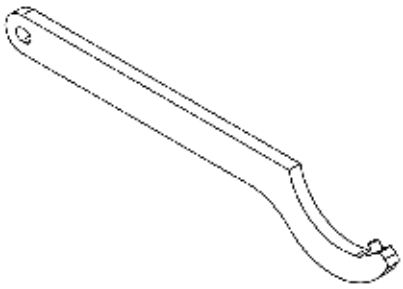

Parts list	Code	List $ Price
Spanner wrench	9388	**218.50**

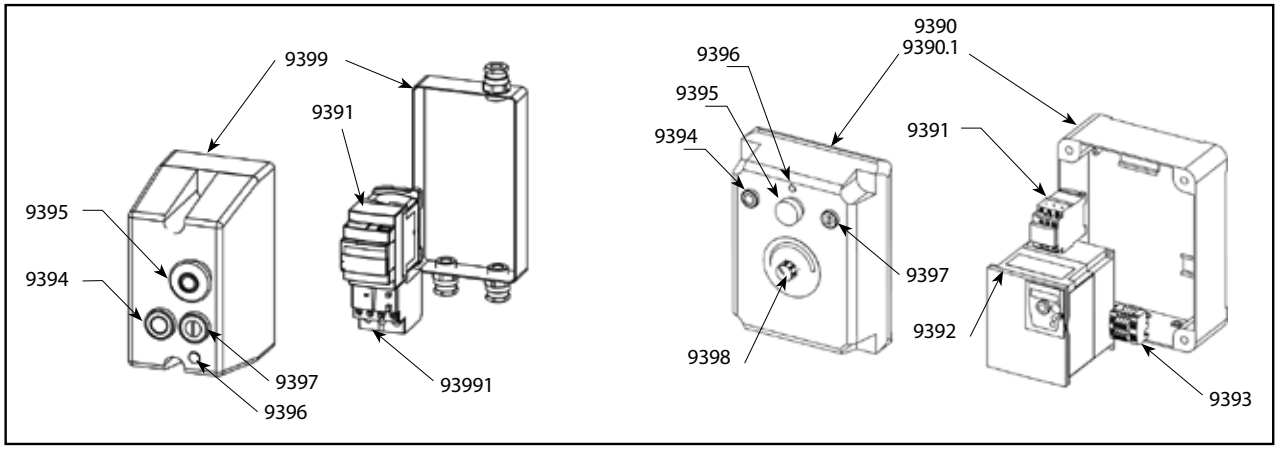

IMPORTANT : *Each spare part order must include the type and the number of the product which appears on the identification plate.*

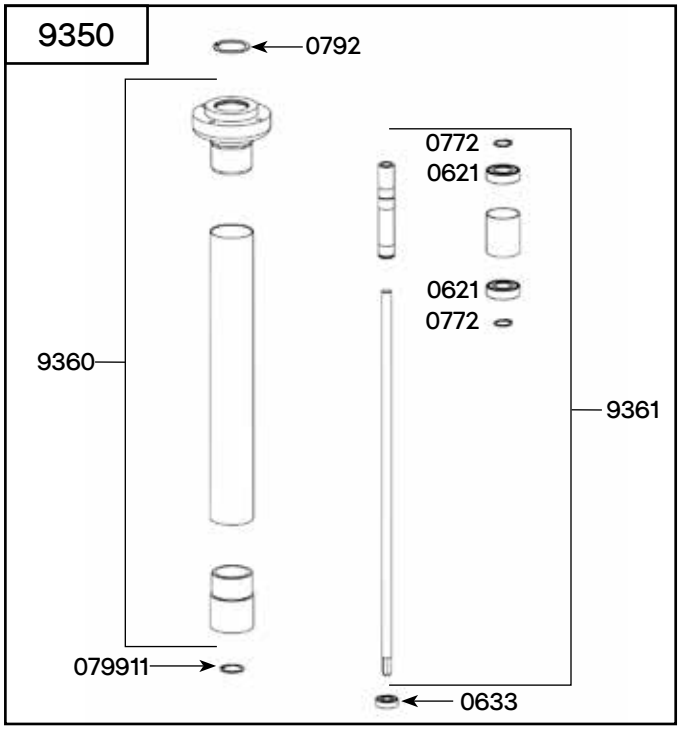

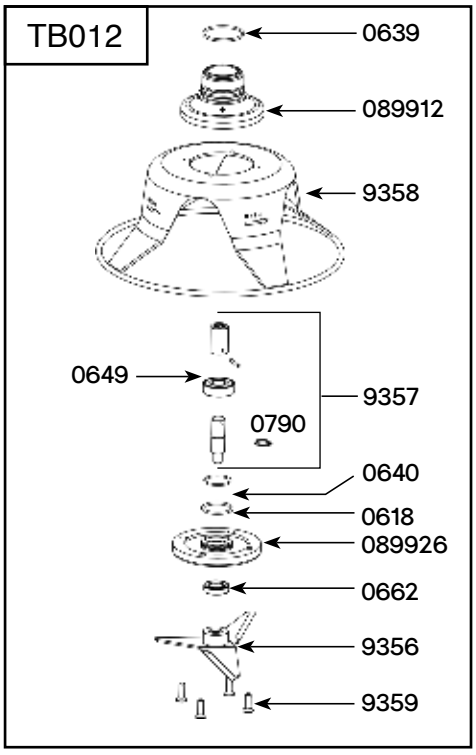

Parts list	Code	List $ Price
Foot attachment assembling	**9350**	**1347.79**
Ball bearing (unit)	0621	**50.02**
Ball bearing	0633	**30.27**
Clips (2)	0772	**12.50**
Rubber ring for upper bearing holder	0792	**10.59**
Rubber ring case	079911	**9.61**
Bearing holder. brace. case	9360	**710.88**
Drive shaft	9361	**675.57**
Detachable bell assembling	**TB012**	**2277.00**
Toric joint 30 x 3	0618	**6.00**
Toric joint 42 x 2.5	0639	**18.94**
Toric joint 34 x 2	0640	**15.15**
Ball bearing	0649	**100.09**
Waterproof lip seal	0662	**98.15**
Open head locking washer	0790	**6.41**
Lower bearing	089912	**482.24**
Seal support	089926	**351.20**
Waterproofness set (seal + ball bearing + screws + open head locking washer)	9349	**191.93**
Blade	9356	**327.70**
Lower shaft + bearing+coupling + clips	9357	**370.56**
Protection bell	9358	**206.68**
Assembling set of screw for the bell	9359	**20.12**
Detachable blender assembling	**TB 004**	
Toric joint	0639	**18.94**
Ball bearing	0649	**100.09**
Waterproof seal	0665	**76.04**
Elastic ring 15	0790	**6.41**
Elastic ring 35	079977	**27.10**
Hammer	08999920	**630.63**
BLENDER POWER PRO bell	08999921	**1503.36**
Waterproof set (seal + bearing + screw + clips)	9348	**209.66**
Lower shaft + bearing + coupling + clips	9357	**370.56**

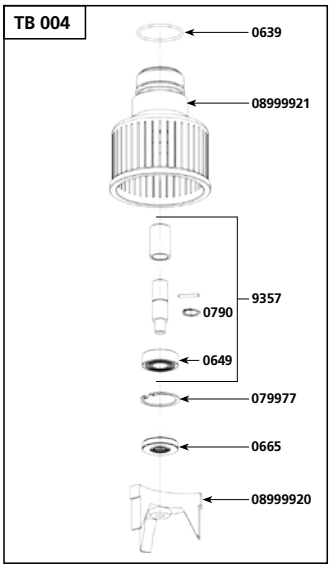

Tel. 1.800.267.7794
Fax : 1.877.668.6623

www.dynamicmixersusa.com
e-mail : info@dynamicmixers.com

Parts list	Code	List $ Price
Pin-brake assembling 9352		
Plain screw M8x30	0773	**8.84**
Rubber ring for brake thrust	0788	**9.61**
Compression spring	0789	**30.27**
Rubber ring for brake axle	0791	**8.76**
Handle for brake	079912	**71.86**
Insulating sheet	089916	**45.38**
Brake thrust	089921	**23.46**
Interpolated sheet	089927	**39.06**
Jib plate holder	089932	**158.32**
Handle	9077	**34.87**
Handle screws	9078	**4.47**
Brake axle	9372	**106.36**
Microswitch + screws	9373	**307.54**
Pin-brake + eccentric + cam + cam axle	9374	**962.90**

Parts list	Code	List $ Price
Additional parts		
Detachable handle	0793	**60.49**
Ring 50x12	089953	**30.27**
Fixed wheel + screws (unit)	9353	**60.49**
Brake wheel + screws (unit)	9354	**80.65**
Frame + jib holder	9355	**2409.77**

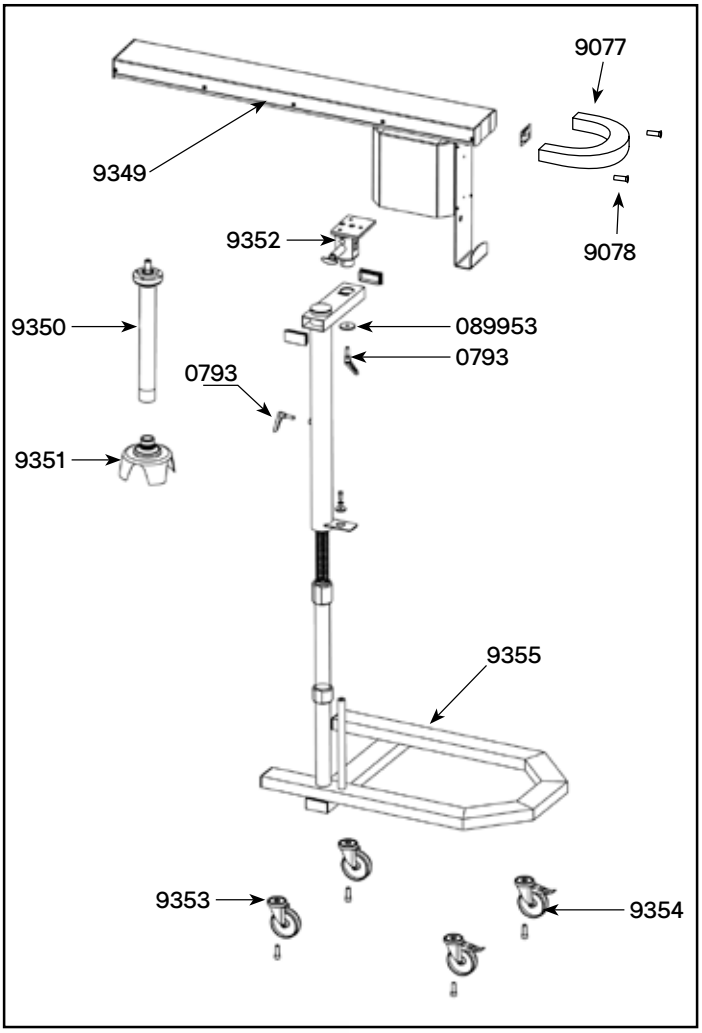

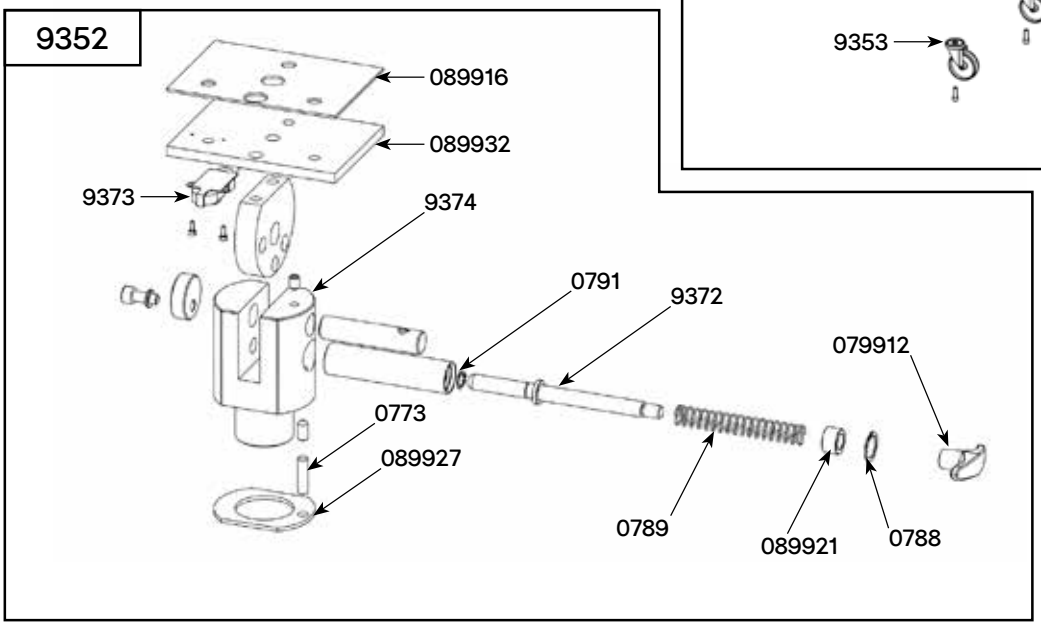

IMPORTANT : *Each spare part order must include the type and the number of the product which appears on the identification plate.*

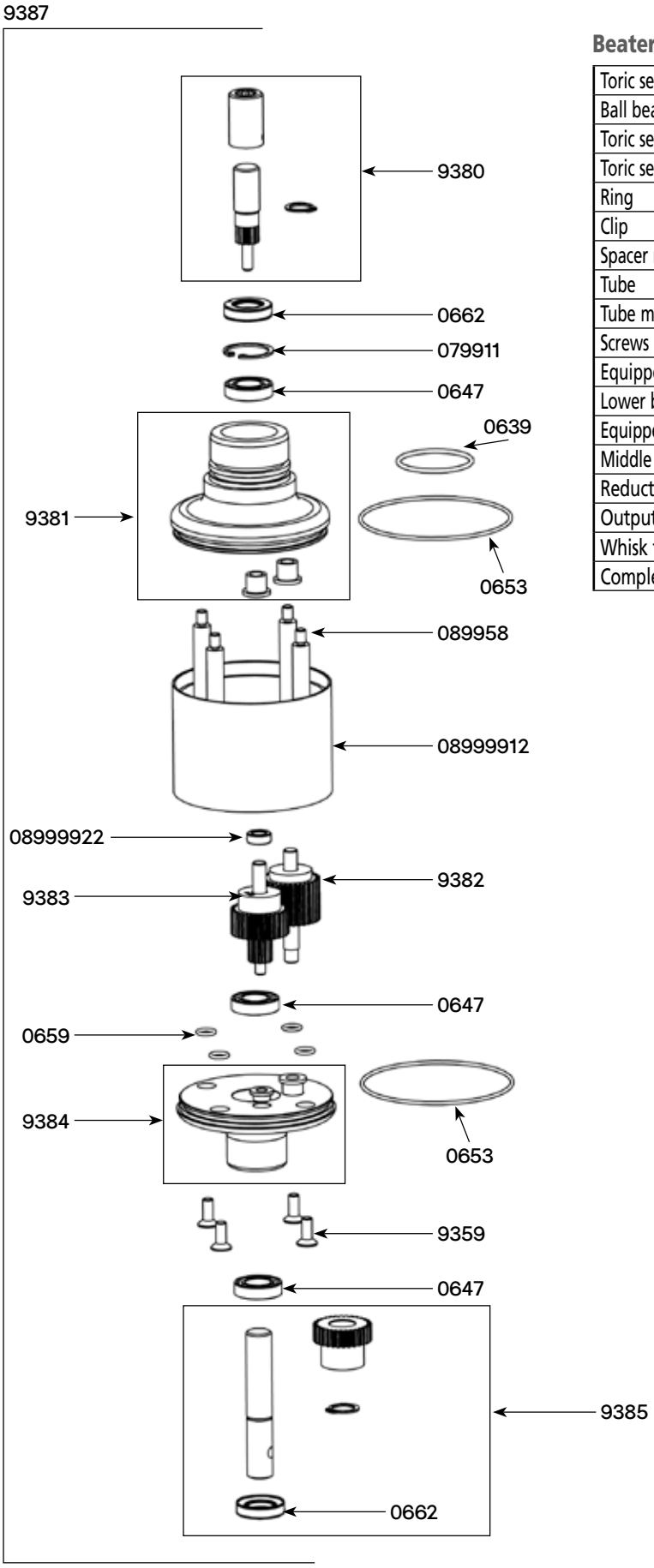

Parts list	Code	List € Price
Beater whisk assembling		
Toric seal 42 x 2.5	0639	**18.94**
Ball bearing	0647	**27.06**
Toric seal 86 x 2	0653	**8.98**
Toric seal 8 x 1.9 (1)	0659	**2.85**
Ring	0662	**98.15**
Clip	079911	**9.61**
Spacer rod (1)	089958	**75.65**
Tube	08999912	**432.17**
Tube middle gear	08999922	**63.83**
Screws M6 (4)	9359	**20.12**
Equipped upper shaft	9380	**179.70**
Lower bearing + rings	9381	**562.75**
Equipped output axle w/ 2 gears	9382	**444.52**
Middle gear and shaft	9383	**394.86**
Reduction case holder + rings	9384	**522.56**
Output axle	9385	**347.59**
Whisk tool	9386	**465.82**
Complete reduction casing without whip	9387	**3551.55**

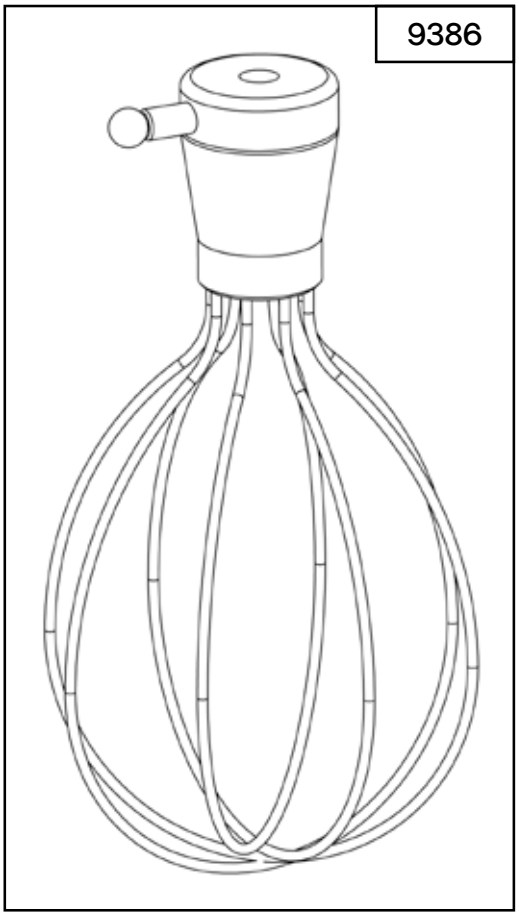

Tel. 1.800.267.7794
Fax : 1.877.668.6623
www.dynamicmixersusa.com
e-mail : info@dynamicmixers.com

Parts list	Code	List $ Price
Ball bearing	0633	**30.27**
Toric joint 42 x 2.5	0639	**18.94**
Rubber ring for brake axle	0791	**8.76**
Rubber ring case	079911	**9.61**
Mixer foot extension	9333	**807.18**
Drive shaft	9334	**320.75**
Brace and case	9335	**477.22**

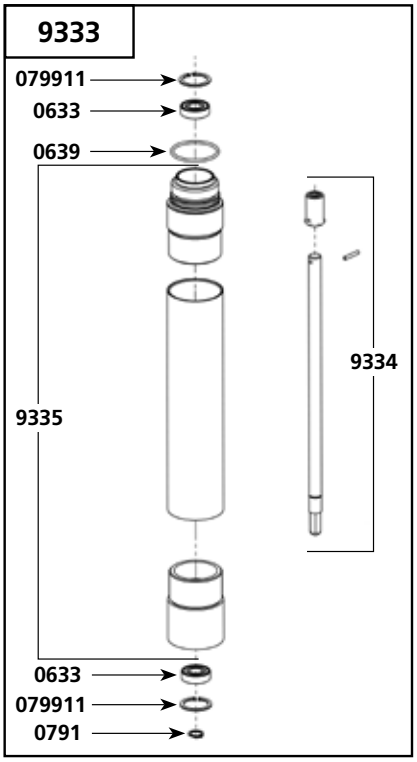

DYNAPUMP - Ref TB030

Parts list	Code	List $ Price
Right half clamp	08999930	**651.16**
Left half clamp	08999931	**651.16**
3/4 Stainless male cap	08999932	**19.66**
3/4 Stainless female reducer	08999933	**61.20**
Pump hinge	08999935	**14.26**
3/4 Male fitting	08999936	**146.42**
Hose nipple camlock fittings DN19	08999937	**177.00**
3/4 Hose nipple threaded connection	08999939	**83.05**
25-35 Hose clamp	08999940	**27.10**
Pump distribution gun	08999941	**1319.81**
Pump locker + washer + butterfly nut	9347	**53.32**
Gigamix Gun (see machine catalog)	TB040	**1842.50**
Hose pipe (2,5 cm)	TB045	**55.00**
Hose pipe with cam axle	TB046	**434.50**

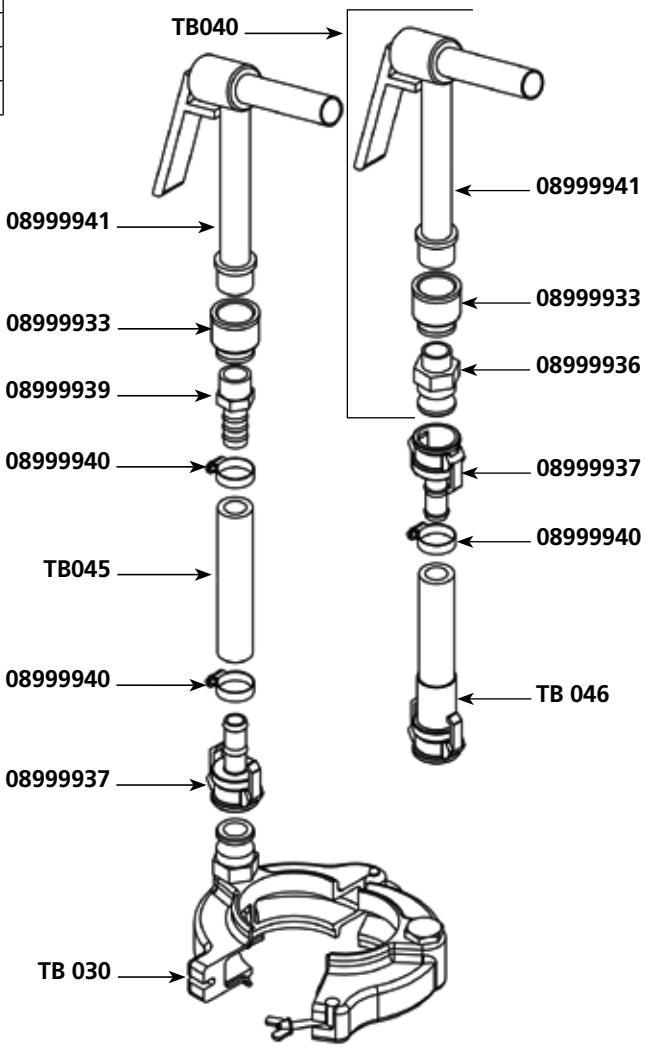

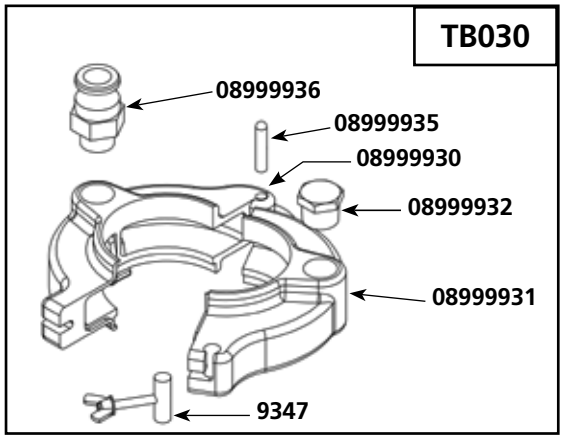

IMPORTANT : *Each spare part order must include the type and the number of the product which appears on the identification plate.*

PA 96 CITRUS JUICER - DYNAJUICER

Parts list	Code	List $ Price
Pulp filter	0420	**24.33**
Base screws (3)	0702	**1.02**
Pad	0748	**3.86**
Motor screw (1)	079929	**1.51**
Strain relief 230 V	0950	**3.44**
Strain relief 115V	0950.1	**3.44**
Switch	0998	**35.18**
Switch from N°70037	0998.1	**35.18**
Motor holder + waterproof ring	9601	**48.69**
Power cord 230 V	9602	**41.06**
Power cord 115 V	9602.1	**69.47**
Power cord (UK)	9602.2	**69.47**
Power cord (Australian)	9602.3	**62.51**
Motor w/ capacitor & shaft 230 V	9603	**549.16**
Motor + capacitor + shaft 115 V (*new smaller motor from N°1700046; check serial number)	9603.1	**549.16**
Upper ring	9604	**52.09**
Top orange container	9605	**104.21**
Centrifuge cone	9606	**33.98**
Base	9607	**104.21**
Centrifuge cone (small)	9608	**33.98**

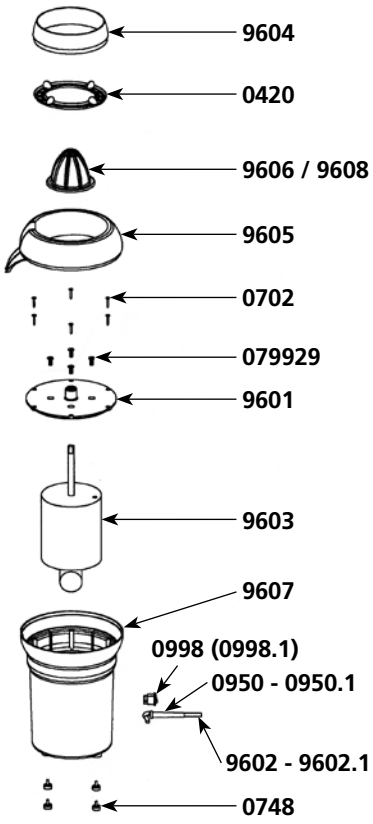

SM 4/6/8/10/12 MIXER SUPPORTS

Parts list	Code	List $ Price
Tightening knob	0701	**22.20**
Tightening knob	0707	**19.41**
White knob (x2)	0728	**8.47**
Plastic caps	45610	**8.34**
Plastic holder for tube	45900	**116.75**
Orange half moon + screws + washer	45900.1	**17.26**
60 mm width bracket	45901	**94.48**
20 mm width bracket	45902	**63.92**
Exterior stop (x2)	45610.S	**7.96**

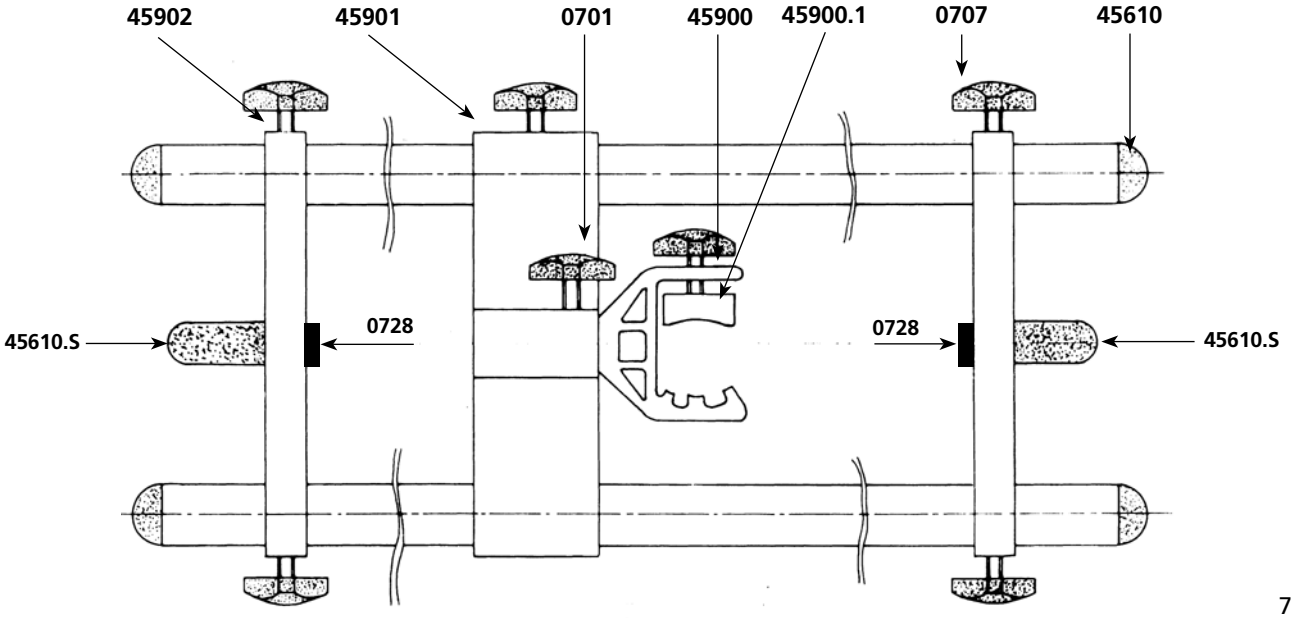

Tel. 1.800.267.7794
Fax : 1.877.668.6623
www.dynamicmixersusa.com
e-mail : info@dynamicmixers.com

CF 2000 FOOD CUTTER

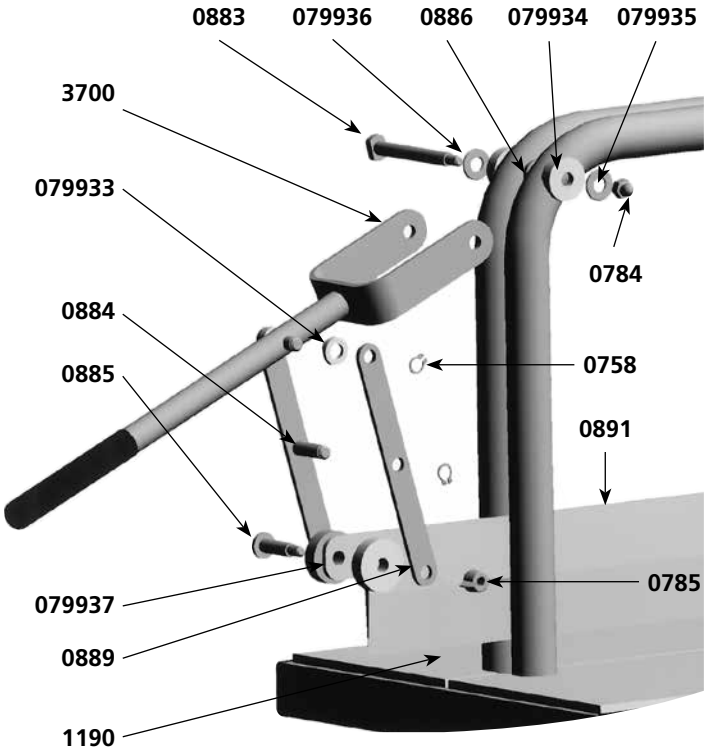

Parts list	Code	List $ Price
Circlips	0758	**0.64**
Forks break nut	0784	**0.73**
Wing nut	0785	**0.70**
Fork axle	0883	**27.96**
Connecting rod axle	0884	**5.28**
Blade axle	0885	**14.47**
Thickness wedge	0886	**10.53**
Connecting rod	0889	**17.22**
Knife blade	0891	**219.65**
Tray	1190	**38.66**
Fork	3700	**122.11**
Connecting rod concave washer	079933	**0.54**
Fork concave washer	079934	**0.54**
Brake nut washer	079935	**0.07**
Fork washer	079936	**0.07**
Blade plastic washer	079937	**0.54**

GM93

Parts list	Code	List $ Price
Motor 230 V	0505	**1437.71**
Motor 115 V	0518	**2466.61**
Waterproof seal	0620	**113.36**
Lower or upper ball bearing	0621	**50.02**
Transmission belt	0625	**195.86**
Plastic handle	9077	**34.87**
Pole	0899.14	**951.83**
Hood pole	0899.15	**325.03**

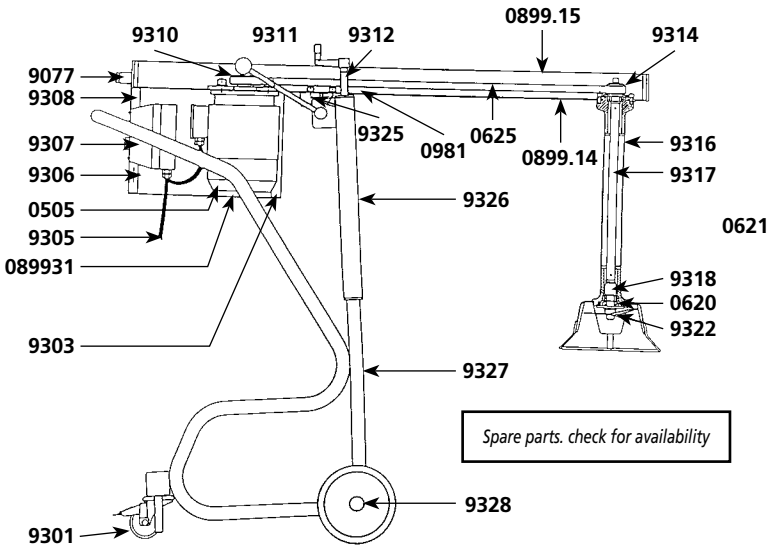

Parts list	Code	List $ Price
Side hood	0899.31	**185.80**
Magnetic switch	0981	**268.40**
Wheel with brake	9301	**223.99**
Front hood	9303	**160.88**
Power cord (380V)	9305	**171.08**
Hood screw w/ plastic washer (unit)	9306	**1.25**
Switch w/ control box	9307	**581.82**
Switch w/ control box	9307.1	**581.82**
Back hood	9308	**177.96**
Motor pulley	9310	**501.51**
Squeezing handle	9311	**376.43**
Level adjustment handle	9312	**102.32**
Shaft pulley	9314	**348.13**
Foot assembly	9316	**2214.54**
Main shaft	9317	**369.61**
Lower shaft	9318	**431.20**
Cutter blade	9322	**342.23**
Rubber holders (3)	9325	**220.62**
Fork	9326	**1178.10**
Frame	9327	**2737.88**
Front wheel	9328	**104.63**

IMPORTANT : *Each spare part order must include the type and the number of the product which appears on the identification plate.*

Parts list SD 99	Code	List $ Price
Outside basket	1801	**140.07**
Inside basket	AC011	**111.65**
Complete cover	1803	**83.83**
Cover w/o small cover. handle & gear	1804	**63.09**
Handle only	1809	**64.78**
Axle for outside basket	1810	**11.41**
Small cover with handle & gear	1812	**104.87**
Bushing + Housing	1814	**54.27**
Small cover (w/o handle & drive gear)	2805	**30.83**
Perforated drive gear	2806	**36.69**
Small gear	2808	**30.62**
Pin	2811	**7.00**
Axle for drive & small gear	2813	**17.05**
Set of gears (2x2806. 2808. 2811)	2815.1	**60.26**
Handle screws (4)	9014	**0.91**
Orange plastic nuts (4)	9014.P	**1.80**
Stainless steel pins (M4x25) (4)	9014.G	**2.08**

Parts list SD 92	Code	List $ Price
Outside basket	2801	**214.37**
Inside basket	AC010	**133.98**
Complete cover	2803	**124.85**
Cover w/o small cover. handle & gear	2804	**87.54**
Small cover (w/o handle & drive gear)	2805	**30.83**
Perforated drive gear	2806	**36.69**
Small gear	2808	**30.62**
Handle only	2809	**70.07**
Axle for outside basket	2810	**12.41**
Pin	2811	**7.00**
Small cover with handle & gear	2812	**104.87**
Axle for drive & small gear	2813	**17.05**
Bushing + Housing	2814	**56.89**
Set of gears (2 X 2806. 2808. 2811)	2815.1	**60.26**
Handle screws (4)	9014	**0.91**
Orange plastic nuts (4)	9014.P	**1.80**
Stainless steel pins (M4x25) (4)	9014.G	**2.08**

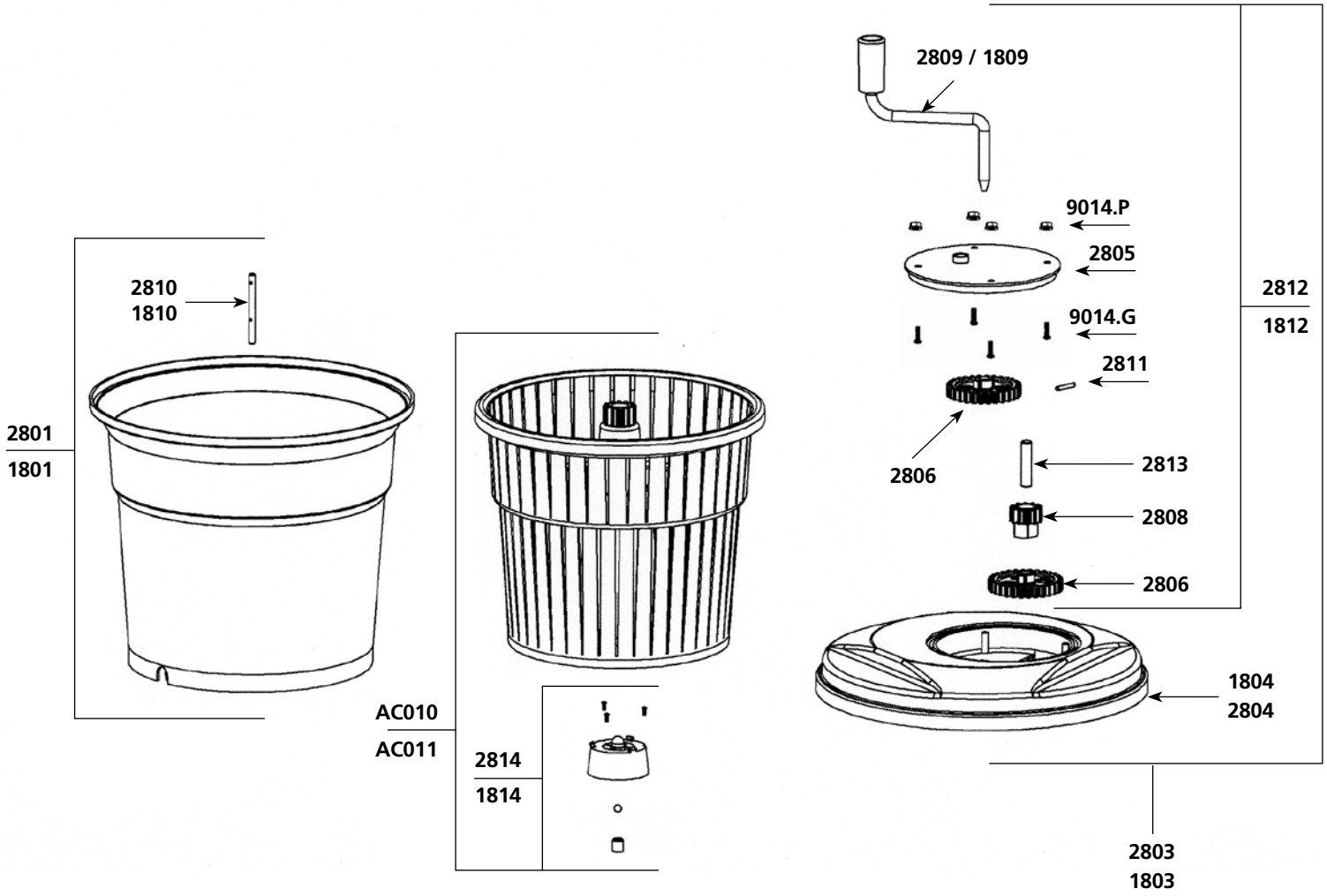

Tel. 1.800.267.7794
Fax : 1.877.668.6623

www.dynamicmixersusa.com
e-mail : info@dynamicmixers.com

EM 98 ELECTRIC SALAD SPINNER

Parts list	Code	List $ Price
Self-lubricating ring	0603	**4.57**
Handle screw (ea)	0720	**2.75**
Handle	0782	**27.43**
Friction washer	0787	**3.59**
Motor housing screws	079917	**1.00**
Switch	0905	**28.85**
Switch protector	0905.1	**7.93**
Strain relief 230 V	0950	**3.44**
Strain relief 115 V	0950.1	**3.44**
Power cord 230 V	0966	**38.09**
Power cord 115 V	0967	**38.09**
Outside basket	2801	**214.37**
Inside basket	AC010	**133.98**
Cover w/o small cover. handle & gear	2804	**87.54**
Axle for outside basket	2810	**12.41**
Axle (including screw)	2814	**56.89**
Motor housing 230V (with label)	3001	**56.34**
Motor housing 115V (with label)	3001.1	**56.34**
Big gear	3002	**33.89**
Gear housing protector	3003	**10.51**
Motor 230 V (+ capacitor)	3004	**691.89**

Parts list	Code	List $ Price
Motor 115 V (+ capacitor)	3004.1	**541.06**
Motor plate	3005	**61.27**
Small gear	3006	**30.62**
Axle. big gear	3007	**17.26**
Capacitor 230V	3008	**109.27**
Capacitor 115V	3008.1	**109.27**
Motor screws	079929	**1.51**

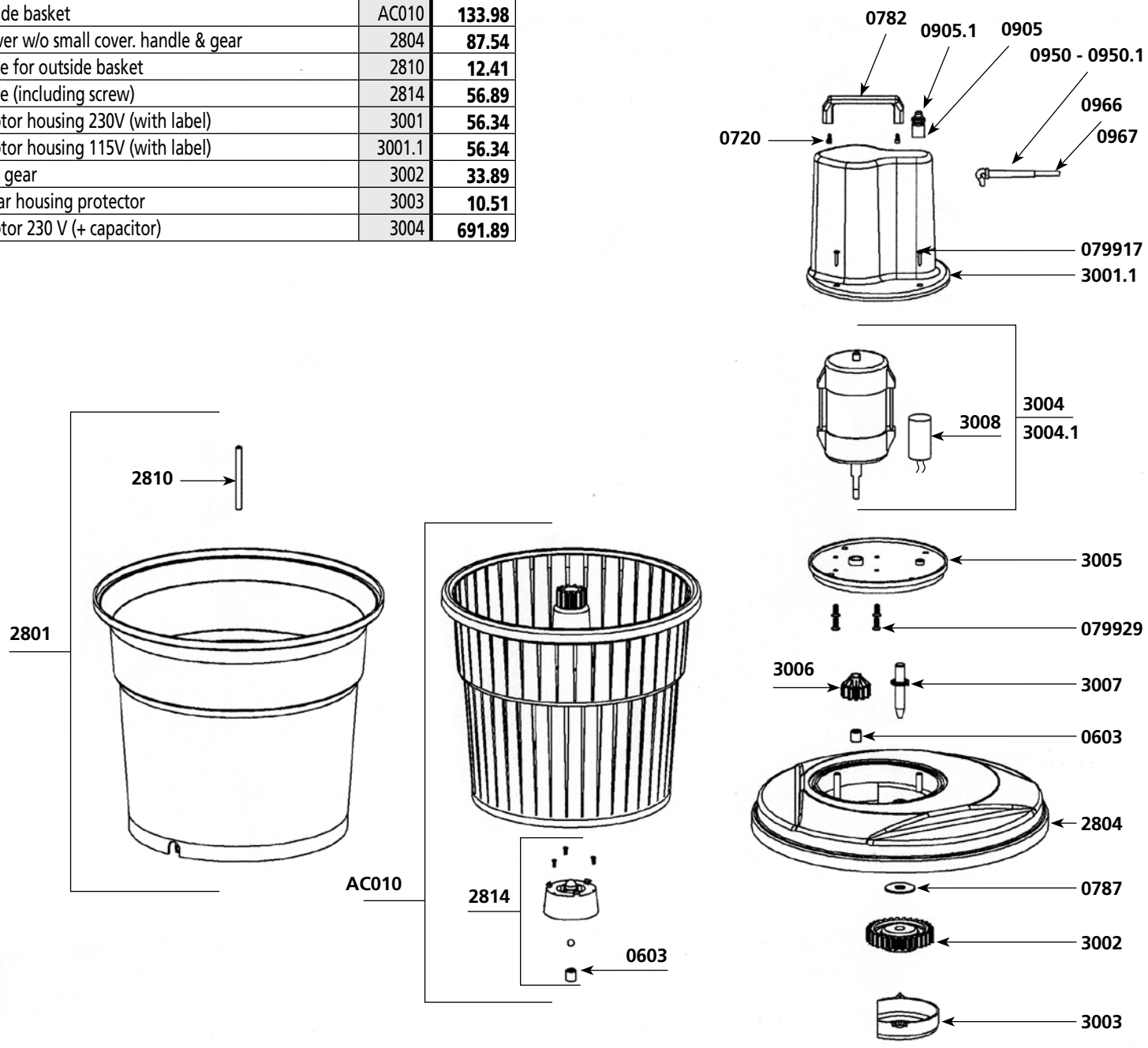

IMPORTANT : *Each spare part order must include the type and the number of the product which appears on the identification plate.*

Parts list	Code	List $ Price
Self-lubricating ring	0603	**4.57**
Handle screw (ea)	0720	**2.75**
Handle	0782	**27.43**
Friction washer	0787	**3.59**
Motor housing screws	079917	**1.00**
Small gear motor shaft	0831	**39.95**
Strain relief 230 V	0950	**3.44**
Strain relief 115 V	0950.1	**3.44**
Power cord 230 V	0966	**38.09**
Power cord 115 V	0967	**38.09**
Outside basket	2801	**214.37**
Inside basket	AC010	**133.98**
Cover w/o small cover. handle & gear	2804	**87.54**
Axle for outside basket	2810	**12.41**
Axle (including screw)	2814	**56.89**
Motor housing 230V (with label)	3001	**56.34**
Motor housing 115V (with label)	3001.1	**56.34**
Big gear	3002	**33.89**
Gear housing protector	3003	**10.51**
Motor 230 V (+ capacitor)	3004	**691.89**
Motor 115 V (+ capacitor)	3004.1	**541.06**

Parts list	Code	List $ Price
Motor plate	3005	**61.27**
Small gear	3006	**30.62**
Axle. big gear	3007	**17.26**
Capacitor 230V	3008	**109.27**
Capacitor 115V	3008.1	**109.27**
Circuit board with timer	3009	**189.09**
Motor screws	079929	**1.51**
Screw M6 x 30	079980	**0.87**
Stainless steel hexagon nut with serrated flange M6	079981	**1.16**
Label with timer	ETIQ0016	**15.46**

AC010

2801

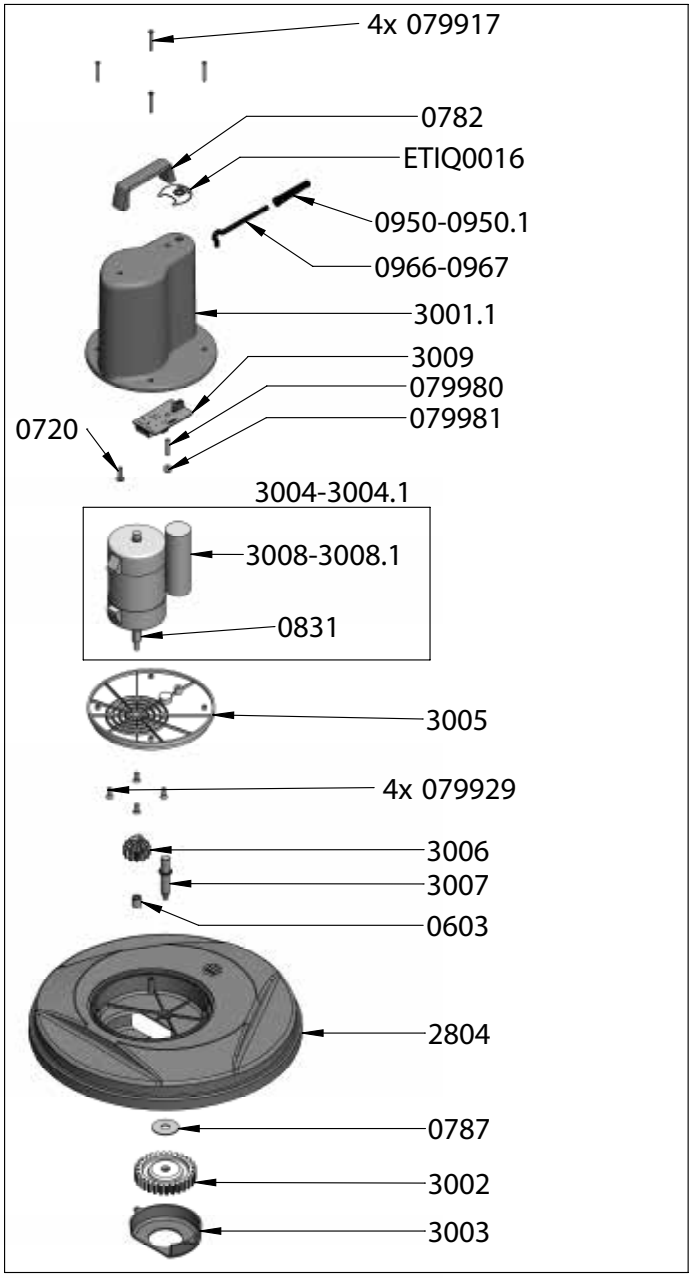

Tel. 1.800.267.7794
Fax : 1.877.668.6623

www.dynamicmixersusa.com
e-mail : info@dynamicmixers.com

MANUAL SALAD SPINNER SD 92 SC (SEALED COVER)

Parts list	Code	List $ Price
Waterproof seal 14 x 24 x 7	0644	**3.67**
Waterproof seal 25 x 27 x 6	0645	**4.81**
O. Ring	0646	**3.67**
Screws TBF 3.9 x 14 (2)	079958	**0.63**
Outside basket	2801	**214.37**
Perforated drive gear + pin	2806	**36.69**
Small gear	2808	**30.62**
Axle for outside basket	2810	**12.41**
Pin for large gear	2811	**7.00**
Axle for drive & small gear	2813	**17.05**
Axle	2814	**56.89**
Set of gears (2x2806. 2808. 2811. 2822)	2815.2	**89.90**
Handle only	2820	**70.22**
Small cover (w/o handle & drive gear)	2821	**30.92**
Output small gear	2822	**35.51**
Equipped cover (O. Ring + Waterproof seal	2823	**95.10**
Coupling sleeve	2824	**20.44**
Inside basket	2825	**131.38**
Small cover with handle & gear	2826	**193.16**
Complete cover	2827	**212.95**
Plate + screws (x 3)	2828	**20.68**
Screws (4)	9014	**0.91**

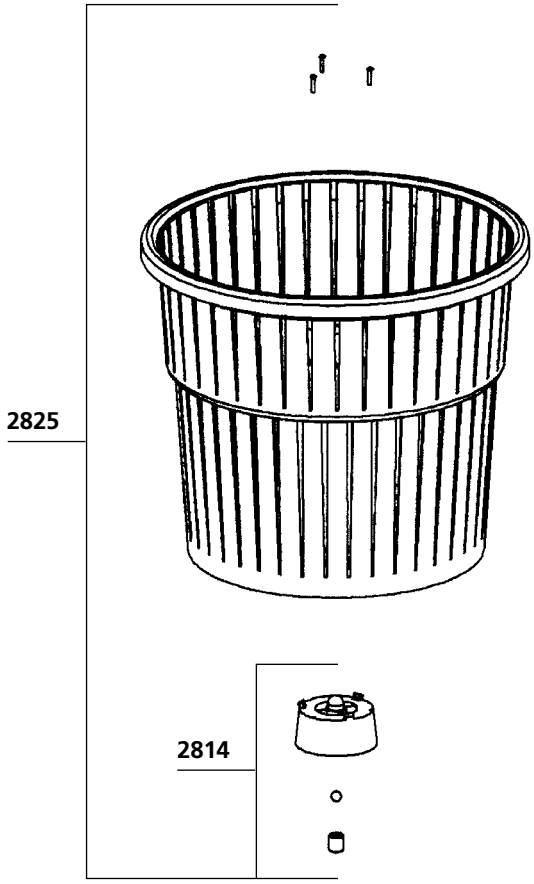

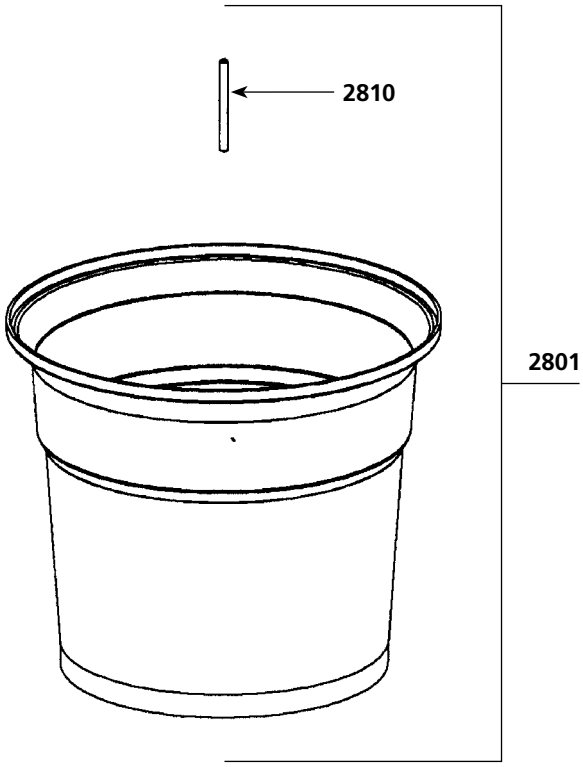

IMPORTANT : *Each spare part order must include the type and the number of the product which appears on the identification plate.*

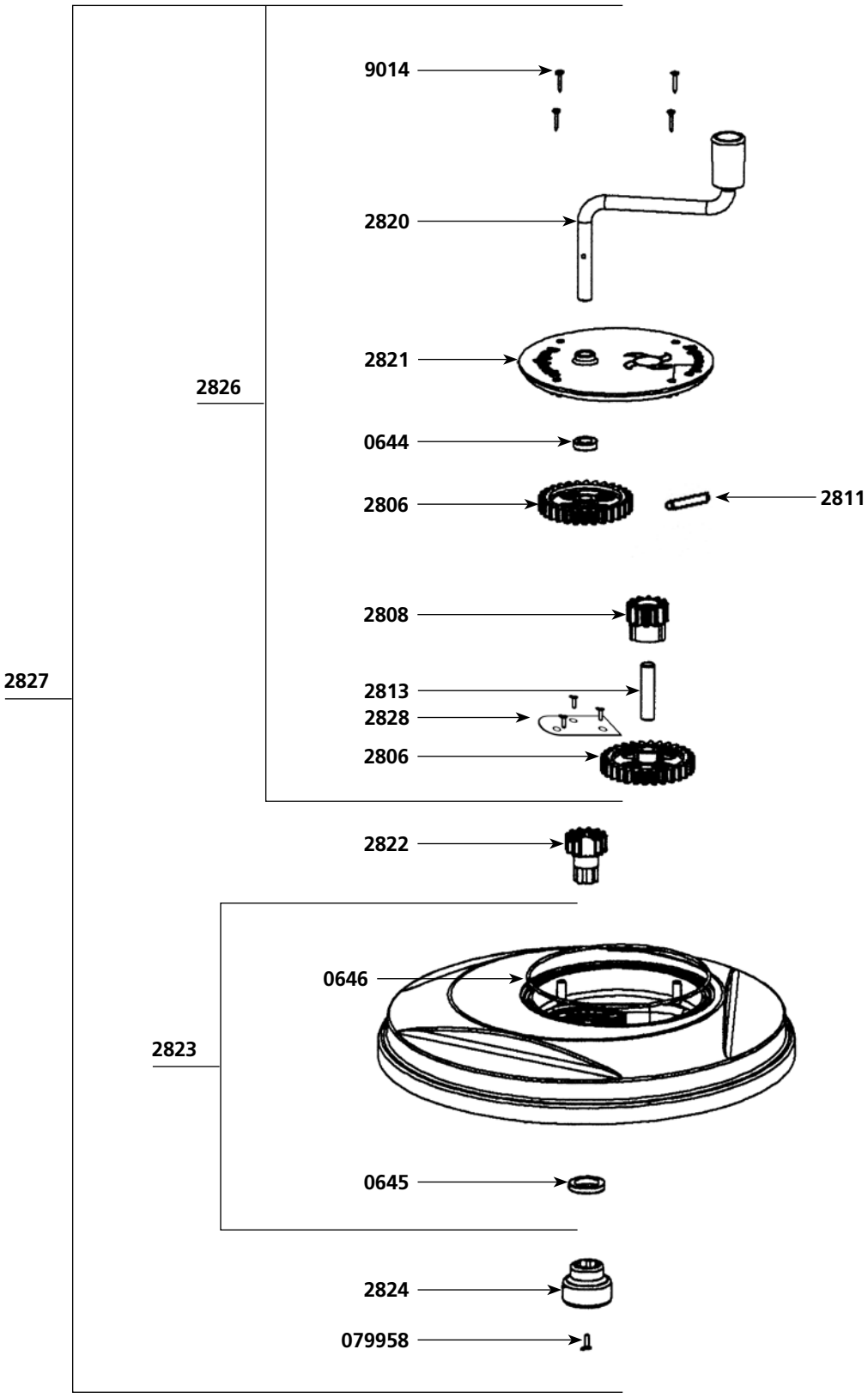

Tel. 1.800.267.7794
Fax : 1.877.668.6623

www.dynamicmixersusa.com
e-mail : info@dynamicmixers.com

Parts list	Code	List $ Price
Mounting support (unit)	3507	**5.49**
Foot	3508	**18.68**
Suction cup (unit)	3512	**13.70**
Self-lubricating ring (unit)	3523	**10.55**
Circlips 18	3524	**9.38**
Handle pin 4X18	3525	**2.81**
Crank handle and pin	3526	**67.28**
Cone shape gear and pin	3527	**18.68**
Screw on button	3600	**13.13**
Smooth cone shape gear	3607	**15.57**
Plastic ball bearings	3608	**21.84**
Handle (crank) assembly kit	3609	**204.27**
Lower plate with screws (6) + self-lubricating ring	3610	**118.61**
Upper cover casing	3611	**148.56**
Pusher	3612	**24.98**
Blockage sheet + screws (4)	3613	**14.70**
Hollow axle	3614	**71.41**
Roller axle	3615	**11.45**
Support with screws (2)	3616	**4.14**
Roller	3617	**6.23**
Disc holder	3618	**131.14**
Cutter pin	3619	**2.49**
Axle assembly for disc holder	3620	**133.65**

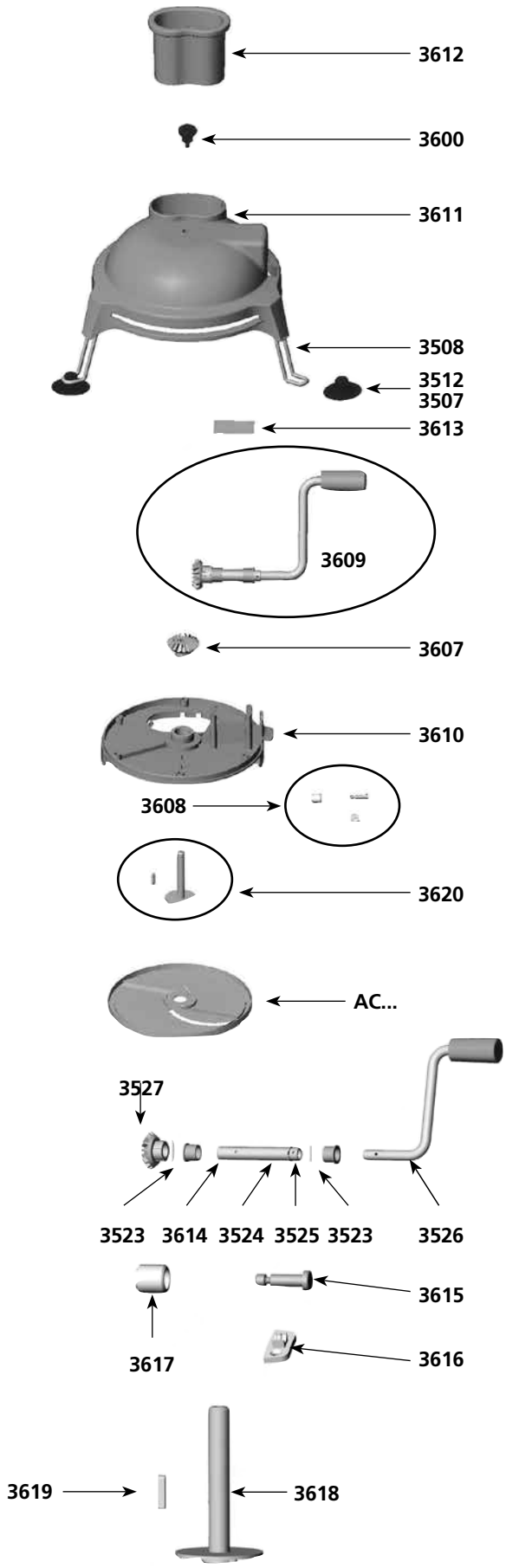

IMPORTANT : *Each spare part order must include the type and the number of the product which appears on the identification plate.*

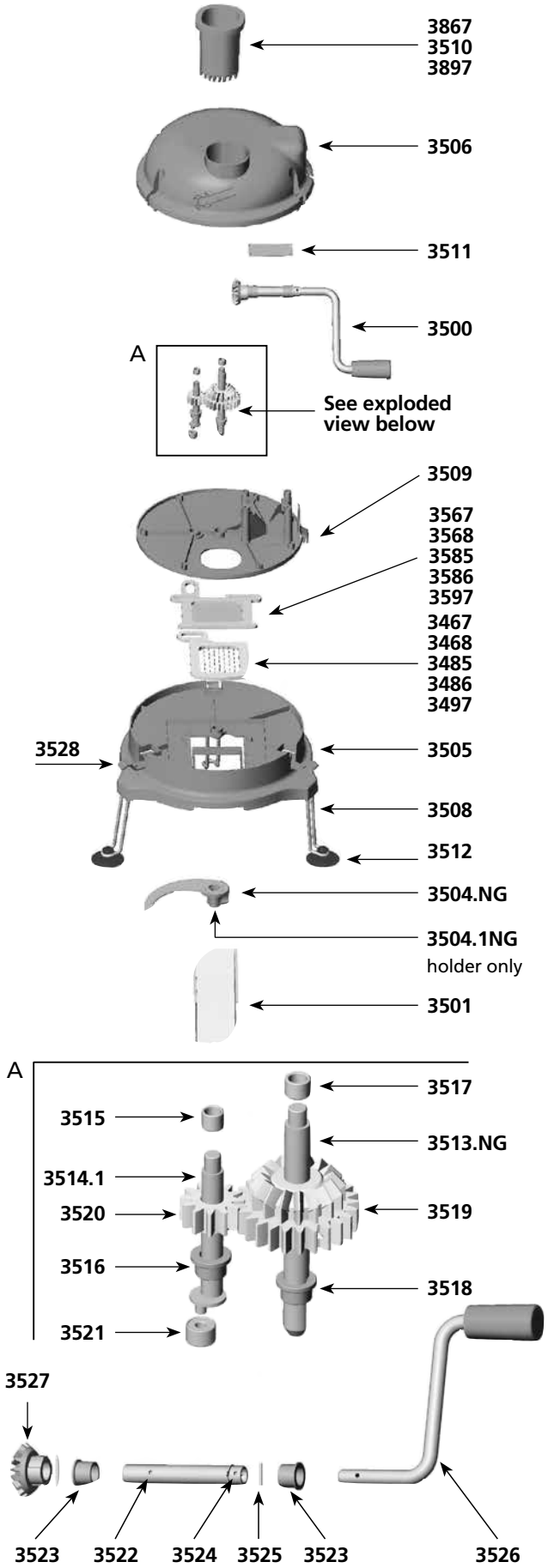

Parts list	Code	List $ Price
Lower grid 1/8	3467	**120.77**
Lower grid 1/2	3468	**120.77**
Lower grid 1/4	3485	**120.77**
Lower grid 3/4	3486	**120.77**
Lower grid 3/8	3497	**120.77**
Handle assembly kit	3500	**215.02**
Chute	3501	**117.69**
Short cutter blade complete - New generation	3504.NG	**77.96**
Knife plastic holder - New generation	3504.1NG	**13.70**
Bottom unit	3505	**93.59**
Top unit w/ seal	3506	**149.03**
Foot	3508	**18.68**
Intermediate plate assembly	3509	**106.07**
Pusher 1/4 / 3/4	3510	**27.47**
Blockage sheet and screws	3511	**19.05**
Suction cup (unit)	3512	**13.70**
Knife driving axle - New generation	3513.NG	**99.17**
Cutting grid axle + bearings	3514.1	**77.84**
Self-lubricating ring 9/12/10	3515	**4.79**
Self-lubricating ring C12/17/12	3516	**7.77**
Self-lubricating ring 10/14/10	3517	**5.57**
Self-lubricating ring C14/18/14	3518	**7.40**
Double gear and pin	3519	**23.56**
Right gear and pin	3520	**14.21**
Ball bearing (unit)	3521	**19.10**
Hollow axle	3522	**84.57**
Self-lubricating ring (unit)	3523	**10.55**
Circlips 18	3524	**9.38**
Pin	3525	**2.81**
Crank handle and pin	3526	**67.28**
Cone shaped gear and pin	3527	**18.68**
Clips (3)	3528	**8.26**
Upper grid 1/8	3567	**120.77**
Upper grid 1/2	3568	**120.77**
Upper grid 1/4	3585	**120.77**
Upper grid 3/4	3586	**120.77**
Upper grid 3/8	3597	**120.77**
Pusher 1/8 / 1/2	3867	**27.47**
Pusher 3/8	3897	**27.47**

Tel. 1.800.267.7794
Fax : 1.877.668.6623

www.dynamicmixersusa.com
e-mail : info@dynamicmixers.com

SD MINI MANUAL SALAD SPINNER SEALED COVER

Parts list	Code	List $ Price
O. RING	0652	
WATERPROOF SEAL	0667	
WATERPROOF SEAL	0669	
PIN 3X20	0744	
SCREWS TBF 3.9X19	079958	
OUTSIDE BASKET + AXLE	5801	
DRIVE GEAR	5806	
BIG GEAR	5807	
SMALL GEAR	5808	
OUTSIDE BASKET AXLE	5810	
DRIVE & SMALL GEAR AXLE	5813	
AXLE	5814	
SET OF GEARS	5815.2	
CRANK ASSEMBLY	5820	
SMALL COVER (WITHOUT HANDLE & DRIVE GEAR)	5821	
OUTPUT SMALL GEAR	5822	
EQUIPPED COVER	5823	
COUPLING SLEEVE	5824	
INSIDE BASKET	5825	
COMPLETE COVER	5827	
HANDLE SCREWS (4)	9014	

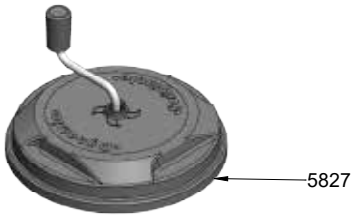

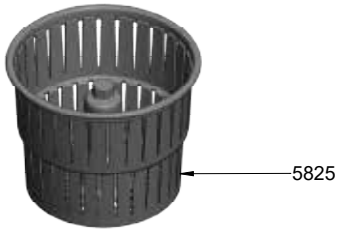

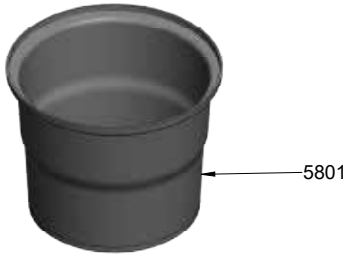

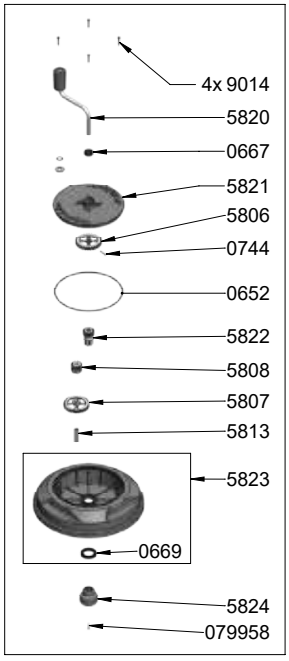

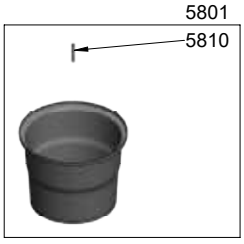

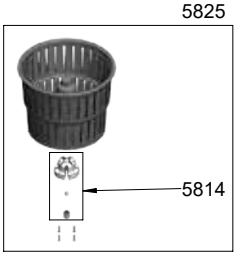

IMPORTANT : *Each spare part order must include the type and the number of the product which appears on the identification plate.*

Tel. 1.800.267.7794
Fax : 1.877.668.6623

www.dynamicmixersusa.com
e-mail : info@dynamicmixers.com

USA
1320 ROUTE 9 #1352
CHAMPLAIN, NY - 12919
PHONE (800) 267-7794
INFO@DYNAMICMIXERS.COM
DYNAMICMIXERSUSA.COM

A NADIA GROUP COMPANY

facebook.com/dynamicmixers
@dynamicmixers